US006976393B1

(12) **United States Patent**
**Kimball et al.**

(10) **Patent No.: US 6,976,393 B1**
(45) **Date of Patent: Dec. 20, 2005**

(54) **PYGMY CURRENT METER WITH MAGNETIC SWITCH**

(75) Inventors: **Scott A. Kimball**, Pass Christian, MS (US); **Janice M. Fulford**, Bay St. Louis, MS (US)

(73) Assignee: **The United States of America as represented by the Secretary of the Department of the Interior**, Washington, DC (US)

( * ) Notice: Subject to any disclaimer, the term of this patent is extended or adjusted under 35 U.S.C. 154(b) by 23 days.

(21) Appl. No.: **10/794,647**

(22) Filed: **Mar. 8, 2004**

(51) **Int. Cl.**[7] ..... **G01D 21/00**
(52) **U.S. Cl.** ..... **73/170.29**; 73/861.85; 73/170.08
(58) **Field of Search** ..... 73/170.29, 861.22, 73/861.83, 861.76, 170.08, 861.85

(56) **References Cited**

U.S. PATENT DOCUMENTS

2,614,425 A * 10/1952 Falk ..... 73/861.76
2,813,424 A * 11/1957 Liepmann et al. ..... 73/861.22
3,788,142 A * 1/1974 Goransson ..... 73/861.83
4,122,714 A 10/1978 Kobayashi et al. ..... 73/194
4,840,062 A * 6/1989 Futrell, II ..... 73/170.29
4,866,985 A * 9/1989 Futrell, II ..... 73/170.29
6,618,680 B2 9/2003 Ross et al. ..... 702/45

* cited by examiner

*Primary Examiner*—Edward Lefkowitz
*Assistant Examiner*—Andre Allen
(74) *Attorney, Agent, or Firm*—Mark Homer

(57) **ABSTRACT**

An apparatus for measuring fluid velocity includes a generally Y-shaped yoke including a base and first and second forks, the first and second forks including through holes at ends thereof; a bucket wheel supported between the first and second forks of the yoke; a first shaft that passes through the through hole in the first fork and supports one side of the bucket wheel; a second shaft that passes through the through hole in the second fork and supports the other side of the bucket wheel, the second shaft rotating with the bucket wheel and including a magnet mounted therein; the second fork of the yoke including an opening for receiving a reed switch assembly, the opening communicating with the through hole in the second fork, the magnet on the second shaft being aligned with the opening whereby when the second shaft rotates the magnet passes by the opening; and a reed switch assembly mounted in the opening in the second fork of the yoke.
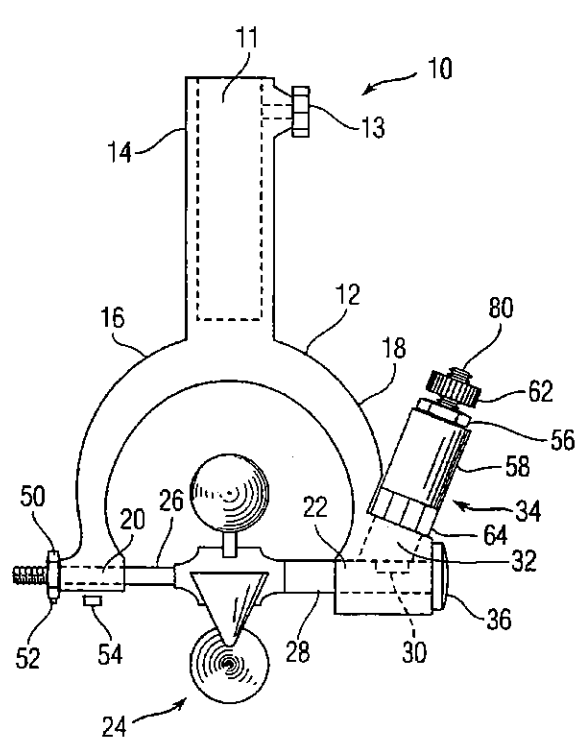
**8 Claims, 2 Drawing Sheets**