Department of the Interior
U.S. Geological Survey

LANDSAT DATA CONTINUITY MISSION (LDCM) DATA PROCESSING AND ARCHIVE SYSTEM (DPAS) OPERATIONS CONCEPT DOCUMENT (OCD)

Version 7.0

May 2013

science for a changing world

Executive Summary

The Landsat Data Continuity Mission (LDCM) is a remote sensing mission which provides data continuity to the Landsat satellite series global multispectral data collection and distribution. LDCM is a satellite- and ground-based collection providing the following capabilities:

- Global, moderate-resolution, multispectral data collection
- Long term LDCM data archiving
- Web-enabled access
- Continued Landsat International Cooperators (IC) support
- Level 0 (L0) and Level 1 (L1) data products

The LDCM Project consists of three major mission components: the Space Segment (SS), Ground Segment (GS), and Launch Services Segment (LSS). Because LDCM is a cooperative effort between National Aeronautics and Space Administration (NASA) and the U.S. Geological Survey (USGS), each agency has specific responsibilities for delivery of major overall mission capabilities. The Data Processing and Archive System (DPAS) is part of the LDCM GS.

The DPAS Operations Concept Document (OCD) presents the operational concepts, functions, and interactions of the DPAS.

Contents

Executive Summary ..... **ii**
Document History ..... Error! Bookmark not defined.
Contents ..... **iii**
List of Figures ..... **vi**
Section 1 Introduction **1**
1.1 Background 1
1.2 Purpose and Scope 2
1.2.1 Document Organization 2
Section 2 System Inputs and Outputs **3**
2.1 Major Inputs 3
2.1.1 Block Address Data (BAD) 3
2.1.2 Digital Elevation Model (DEM) 3
2.1.3 Ground Control Point (GCP) 3
2.1.4 Interval Definition File (IDF) 3
2.1.5 Mission Data 3
2.1.6 UTC / UT1 / Pole Wander 4
2.2 Major Outputs 4
2.2.1 Bias Parameter File (BPF) 4
2.2.2 Bulk Metadata 4
2.2.3 Calibration Product 4
2.2.4 Calibration Parameter File (CPF) 4
2.2.5 Characterization Data 5
2.2.6 Full Resolution Browse (FRB) 5
2.2.7 L0Ra 5
2.2.8 L0Rp 5
2.2.9 L1Gt 6
2.2.10 L1T 6
2.2.11 Quality Band (QB) 6
2.2.12 Reduced Resolution Browse (RRB) 6
2.2.13 Response Linearization Look Up Table (RLUT) 6
Section 3 LDCM DPAS Overview **8**
3.1 Subsystem Descriptions 11
3.1.1 Storage and Archive Subsystem (SA) 11
3.1.2 Inventory Subsystem (INV) 13
3.1.3 Ingest Subsystem (IS) 15
3.1.4 Subsetter Subsystem 17
3.1.5 Level 1 Product Generation Subsystem (LPGS) 19
3.1.6 Image Assessment Subsystem (IAS) 21
3.1.7 User Portal (UP) Subsystem 23
3.1.8 Mission Management Office (MMO) Database Subsystem (MDS) 27
3.2 Priority Processing 29
Section 4 DPAS Operations **30**

4.1 Data Processing, Archive, and Distribution Operations 30
4.1.1 Operations Facility Layout 30
4.1.2 Day In The Life (DITL) Overview 30
4.2 Operational Roles 32
4.2.1 DPAS Operators 32
4.2.2 Data Management Personnel 32
4.2.3 Software Developers 32
4.2.4 System Engineers 32
4.2.5 System Administrators 32
4.2.6 Hardware Engineers 32
4.2.7 Database Administrators 32
4.2.8 Calibration/Validation (Cal/Val) Analysts 32
4.2.9 Data Quality Analyst (DQA) 33
4.2.10 International Cooperators (IC) 33
4.2.11 Mission Management Office (MMO) 33
4.2.12 Configuration Management (CM) 33
Section 5 Scenarios 34
5.1 Scenario Conventions 34
5.2 Standard Processing 35
5.2.1 Ingest Mission Data 36
5.2.2 Standard Product Generation 38
5.2.3 Browse Generation and Quality Band 40
5.3 On-Demand Processing 41
5.4 Mission Data Reprocessing 43
5.5 Data Management 45
5.5.1 Archive Management 45
5.5.2 Storage Management 47
5.5.3 Data Manager Interaction 48
5.6 Reporting (MDS) 49
5.6.1 Metrics Reporting 49
5.6.2 Collection Reconciliation 50
5.7 User Portal 51
5.7.1 Registration 51
5.7.2 Search & Order 52
5.7.3 Information Dissemination 53
5.7.4 Collection Request 54
5.8 Calibration Validation Operations 55
5.8.1 Calibration/Validation (Cal/Val) Processing 55
5.8.2 Calibration Parameter Generation 57
5.9 International Cooperators (IC) 59
5.9.1 Data Validation 59
5.9.2 Data Exchange 60
5.9.3 Mission Data Distribution 61
5.9.4 Metadata Ingest 62
5.9.5 Communication Products 63
5.10 Anomaly Resolution 64

5.10.1 Ingest Error Recovery 64
5.10.2 Product Generation Error Recovery 66
5.10.3 Block Address Data (BAD) Handling 67
5.11 Continuity of Operations 68
5.11.1 Data Recovery 68
5.11.2 System Recovery 69
5.11.3 Routine Backups 71
Appendix A Scenario to Requirements Trace ..... Error! Bookmark not defined.
References 72

List of Figures

Figure 1-1. LDCM Operations Concept Hierarchy 2
Figure 3-1. LDCM Operations Concept Architecture 8
Figure 3-2. DPAS Block Diagram 9
Figure 3-3. DPAS Context Diagram 10
Figure 3-4. SA Block Diagram 12
Figure 3-5. SA Context Diagram 13
Figure 3-6. Inventory Block Diagram 14
Figure 3-7. Inventory Context Diagram 15
Figure 3-8. Ingest Block Diagram 16
Figure 3-9. Ingest Context Diagram 17
Figure 3-10. Subsetter Block Diagram 18
Figure 3-11. Subsetter Context Diagram 19
Figure 3-12. LPGS Block Diagram 20
Figure 3-13. LPGS Context Diagram 21
Figure 3-14. IAS Block Diagram 22
Figure 3-15. IAS Context Diagram 23
Figure 3-16. User Portal Block Diagram 24
Figure 3-17. User Portal Context Diagram 25
Figure 3-18. MDS Block Diagram 27
Figure 3-19. MDS Context Diagram 28
Figure 3-20. Priority Processing 29
Figure 4-1. Operations Facility Layout 30
Figure 4-2. Day-In-The-Life (DITL) Timeline 31
Figure 5-1. DPAS Scenario Conventions 34
Figure 5-2. Standard Processing Data Flows 35
Figure 5-3. Ingest Mission Data 36
Figure 5-4. Standard Product Generation 38
Figure 5-5. Browse Generation and Quality Band 40
Figure 5-6. On-Demand Processing 41
Figure 5-7. Mission Data Reprocessing 43
Figure 5-8. Archive Management 46
Figure 5-9. Storage Management 47
Figure 5-10. Data Manager Interaction 48
Figure 5-11. Metrics Reporting 49
Figure 5-12. Collection Reconciliation 50
Figure 5-13. Registration 51
Figure 5-14. Search & Order 52
Figure 5-15. Information Dissemination 53
Figure 5-16. Collection Request 54
Figure 5-17. Cal/Val Processing 55
Figure 5-18. Calibration Parameter Generation 57
Figure 5-19. Data Validation 59
Figure 5-20. Mission Data Distribution 61
Figure 5-21. Metadata Ingest 62

Figure 5-22. Communication Products 63
Figure 5-23. Ingest Error Recovery 65
Figure 5-24. Product Generation Error Recovery 66
Figure 5-25. Block Address Data Handling 67
Figure 5-26. Data Recovery 68
Figure 5-27. System Recovery 70
Figure 5-28. Routine Backups 71

Section 1 Introduction

The Landsat Data Continuity Mission (LDCM) is a joint mission formulated by the National Aeronautics and Space Administration (NASA) and the U.S. Geological Survey (USGS). LDCM is a remote sensing satellite mission providing coverage of the Earth's land surfaces. This mission continues the 40+ years of global data collection and distribution provided by the Landsat series of satellites.

1.1 Background

LDCM is a component of the Landsat Program conducted jointly by NASA and the USGS. The goal of LDCM is to continue the collection, archival, and distribution of multispectral imagery affording global, synoptic, and repetitive coverage of the Earth's land surfaces at a scale where natural and human-induced changes can be detected, differentiated, characterized, and monitored over time. The LDCM goal is in keeping with the Landsat programmatic goals stated in the United States Code (USC) Title 15, Chapter 82 "Land Remote Sensing Policy" (derived from the Land Remote Sensing Policy Act of 1992). This policy requires that the Landsat Program provide data into the future that are sufficiently consistent with previous Landsat data to allow the detection and quantitative characterization of changes in or on the land surface of the globe. LDCM was conceived as a follow-on mission to the highly successful Landsat series of missions that provided satellite coverage of the Earth's continental surfaces since 1972. The data from these missions constitute the longest continuous record of the Earth's surface as seen from space.

The LDCM ensures that Landsat-like data will be provided to the USGS National Satellite Land Remote Sensing Data Archive (NSLRSDA) for a ten-year mission life. A ten-year requirement provides a five-year nominal mission lifetime with an additional five years as risk mitigation against delays in future missions.

The Data Processing and Archive System (DPAS) Operations Concept Document (OCD) is one part of the LDCM Ground System OCD, which is part of the overall LDCM Operations Concept (Mission OCD). This hierarchy reflects the operational concepts that correspond to a relative "level" of requirements, which directly relate to a level of detail. The Mission OCD traces its concepts to GSFC-427-02-01 Landsat Data Continuity Mission (LDCM) Science and Mission Requirements Document (SMRD), LDCM-REQ-001 Landsat Data Continuity Mission (LDCM) Ground System Requirements Document (GSRD), and LDCM-REQ-015 Landsat Data Continuity Mission (LDCM) Data Processing and Archive System Requirements Document (DPASRD).

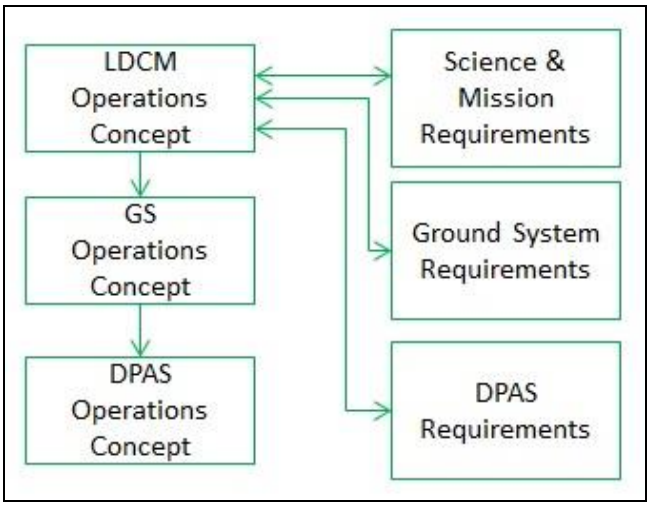

Figure 1-1. LDCM Operations Concept Hierarchy

As shown in Figure 3-1, DPAS is part of the overall Ground System (GS), which is part of the overall mission. Functional decomposition and requirements traceability within this hierarchy ensures the capture of overall mission requirements and concepts at lower levels, specifically the LDCM-OCD-002 Landsat Data Continuity Mission (LDCM) Ground System (GS) Operations Concept Document (OCD), and this document. **Error! Reference source not found.** contains a scenario to requirements traceability matrix, which forms the basis of test case development for formal qualification testing.

1.2 Purpose and Scope

The primary purpose of this document is to provide a description of the functions and operations of the systems, people, and processes that comprise the DPAS. It presents a functional view of the DPAS based on high-level LDCM program guidance and requirements. This document also aids in the development and validation of the DPAS requirements by facilitating test plan development.

The scope of this document includes all functions associated with the DPAS as well as the external entities that interact with the DPAS.

1.2.1 Document Organization

This document contains the following sections:

- Section 1 describes the purpose, objectives, and document content.
- Section 2 provides descriptions of the major inputs and outputs of the DPAS.
- Section 3 presents an overview of the DPAS and its Subsystems.
- Section 4 presents an overview of DPAS Operations, including operational roles.
- Section 5 presents the DPAS operational scenarios.
- **Error! Reference source not found.** provides a DPAS requirement to DPAS scenario traceability matrix.

Section 2 System Inputs and Outputs

2.1 Major Inputs

This section briefly describes the major inputs to the DPAS. For detailed information, consult LDCM-REF-010 Landsat Data Continuity Mission (LDCM) Ground System (GS) Lexicon.

2.1.1 Block Address Data (BAD)

Block Address Data (BAD) is a special collection of data that is manually commanded for acquisition by the Flight Operations Team (FOT) and captured by the Landsat Ground Network (LGN) stations. BAD is automatically transferred by the Data Collection and Routing Subsystem (DCRS) to the Archive Cache, where it is stored and retrieved as needed for analysis, primarily by the LDCM observatory vendor.

2.1.2 Digital Elevation Model (DEM)

A Digital Elevation Model (DEM) is a digital representation of ground topography stored as a series of raster images that is used for terrain correction during Level 1 (L1) processing. DPAS will use the Global Land Survey (GLS) and the Radarsat Antarctic Mapping Project (RAMP) DEM data sets.

2.1.3 Ground Control Point (GCP)

A Ground Control Point (GCP) is a point on the Earth's surface with a known geographic location used to geo-reference image data sources. Each GCP is associated with one or more image chips. For the DPAS, the GCP image chips reside on the Archive Cache, along with a text file (GCPLib) for each path/row; the chip locations are recorded in an Image Assessment Subsystem (IAS) database. The chip source is the GLS Mid Decadal Land Survey Collection. Spatial / temporal queries are used to select specific GCPs and chips used for geometric corrections to the L1 products.

2.1.4 Interval Definition File (IDF)

The Interval Definition File (IDF) defines the set of Mission Data files belonging to a collection interval. The IDF contains descriptive parameters for the interval, the names of all of the Mission Data files, and (for appropriate collection types) the list of associated scenes. The Ground Network Element (GNE) DCRS generates an IDF for each interval and delivers it to the DPAS Ingest Subsystem along with the Mission Data. The IDF is also archived with the Mission Data. A complete interval and an IDF are exchanged either to or from International Cooperators (IC) stations. The GNE (DCRS) provides the IDF file to the DPAS.

2.1.5 Mission Data

A Mission Data set is a collection of files created as a result of receiving instrument data from the satellite and processing it in the LGN. Processing includes removal of the Consultative Committee for Space Data Systems (CCSDS) File Delivery Protocol

(CFDP) protocols in the X-Band downlink. The spacecraft instrumentation implements the framing of the Mission Data files.

The GNE (DCRS) provides Mission Data to the DPAS.

2.1.6 UTC / UT1 / Pole Wander

Universal Time Code (UTC), UTC Corrected (UT1), and Pole Wander data are extracted from the U.S. Naval Observatory (USNO) and used in the development of Calibration Parameters (CP). UTC/UT1 are used for time corrections, which address the need to synchronize the observatory and Earth times. Similarly, Pole Wander information is used to correct for variances in the Earth's rotation.

2.2 Major Outputs

This section briefly describes the major outputs of the DPAS. For detailed information consult LDCM-REF-010 Landsat Data Continuity Mission (LDCM) Ground System (GS) Lexicon.

2.2.1 Bias Parameter File (BPF)

The Bias Parameter File (BPF) supplies radiometric correction parameters required during L1 processing of Operational Land Imager (OLI) and/or Thermal Infrared Sensor (TIRS) Earth image and calibration data products. For an interval of time immediately after the OLI's launch, the initial processing BPF contains values derived from analysis of prelaunch test data. Ingest automatically generates subsequent bias parameters and stores them in the IAS database based on analysis of OLI Shutter and TIRS Deep Space data collects throughout the mission lifetime. The IAS delivers the most recent BPF (applicable to a given Earth image or calibration data product) for L1 radiometric processing. BPFs can be updated as deemed appropriate by the Calibration / Validation Team (CVT) using IAS, such as in response to a confirmed change in bias model parameter values.

2.2.2 Bulk Metadata

Bulk metadata refers to a large volume of Searchable Inventory Database (SID) records, which occurs either as a result of a query or as information provided by an IC to indicate their data holdings. Bulk metadata is also available to researchers who want to perform analytical processing on data holdings within their area of interest.

2.2.3 Calibration Product

IAS creates calibration products as specified by CVT. Unlike standard products, which are distributed to the user community, calibration products are special order products, defined by parameters and/or process flow, for specific research needs by the CVT. An example is an L1 product with a mapping projection other than the Universal Transverse Mercator (UTM) projection.

2.2.4 Calibration Parameter File (CPF)

Calibration parameters are kept in the IAS database. When directed, the parameters are used to create an output file that forms the CPF. The Calibration Parameter File

(CPF) contains all parameters needed to derive the Level 0 Reformatted Product (L0Rp), Level 1 Systematic Terrain (Corrected) (L1Gt), and Level 1 Precision and Terrain (L1T) products from Level 0 Reformatted Archive (L0Ra) data. The Ingest subsystem also uses a CPF during processing of the Mission Data.

Example parameters contained within the CPF include radiometric conversion coefficients, radiometric artifact correction parameters, earth constants, orbit parameters, detector positions, and alignment parameters.

2.2.5 Characterization Data

Characterization data are a set of measurements that are generated during the production of L1 data from the L0Rp data by the Level 1 Product Generation Subsystem (LPGS) and also generated from L0Ra Ancillary, OLI Shutter, TIRS Deep Space and TIRS Blackbody data by the Ingest Subsystem. The measurement information is analyzed and tracked over time in order to describe the performance of the OLI and TIRS instruments, including stability and error rates.

2.2.6 Full Resolution Browse (FRB)

Full Resolution Browse (FRB) images are also known as LandsatLook. These are derived from L1 products (L1Gt or L1T) scaled from 16- to 8-bits per band by the User Portal (UP) Subsystem. The OLI FRB (or LandsatLook natural color) image comprises three spectral bands; the TIRS FRB (or LandsatLook thermal) image is a single band grayscale image with a linear stretch.

2.2.7 L0Ra

L0Ra data are image data with all data transmission and formatting artifacts removed, time provided, spatial, and band-sequentially ordered multispectral digital image data. L0Ra data are interval-based and stored in a format to allow for faster generation of L0Rp products. L0Ra data are generated for all collection types other than BAD.

The Ingest Subsystem creates L0Ra data from Mission Data.

2.2.8 L0Rp

L0Rp data are image data with all data transmission and formatting artifacts removed, time provided, spatial, and band-sequentially ordered multispectral digital image data. L0Rp data are subsetted to the Worldwide Reference System-2 (WRS-2) framing conventions.

L0Rp products include data from all instruments operating within the interval. If the interval was recorded with only a single instrument, then data from only one instrument is present in the L0Rp product. If the interval consisted of data from both instruments, the L0Rp product is include data from both.

The Subsetter Subsystem creates L0Rp *data* from the L0Ra data. The LPGS creates L0Rp *products*. The distinction is that checksum generation and data packaging are performed for the product.

2.2.9 L1Gt

L1Gt data are systematically corrected data resampled for registration to a cartographic projection and referenced to the World Geodetic System 1984 (WGS84), G873, or current version. The geometric corrections incorporate the use of observatory ephemeris data; DEM data are used to correct for terrain relief.

LPGS produces L1Gt products when cloud cover or water prevents the use of precision terrain correction.

2.2.10 L1T

L1T data products are radiometrically corrected, intermediate L1R data products resampled for registration to a cartographic projection; these products are referenced to the WGS84, G873, or current version, and are orthorectified and corrected for terrain relief. The geometric corrections use observatory ephemeris data and GCPs; DEM data are used to correct for terrain relief.

LPGS produces L1T products.

2.2.11 Quality Band (QB)

The Quality Band (QB) is created using OLI data, or OLI and TIRS data, for all sun-lit Earth acquisitions. It is a full resolution image band constructed by setting the bits in each pixel according to specified image quality criteria (such as cloud mask information) for the scene. A 16-bit QB is included with the L1 data products, and an 8-bit version is derived from the 16-bit version to allow mask overlay with the FRB.

LPGS produces 16-bit QBs during L1 processing. UP produces 8-bit versions.

2.2.12 Reduced Resolution Browse (RRB)

The Reduced Resolution Browse (RRB) is a subsampled browse image derived from the FRB. The UP generates and provides the RRBs to the Earth Explorer (EE) system and provides a “quick look” assessment capability during data searching by a user.

2.2.13 Response Linearization Look Up Table (RLUT)

The Response Linearization Look Up Table (RLUT) is an optional file that may accompany a CPF and contains a mapping look up table to linearize the output of the OLI detectors. This correction is used to increase the range of Digital Number (DN) values for preciseness and to limit the number of saturated pixels to true saturations (and on the dark end, limit it to missing data). The CVT initially creates the RLUT using the Cal/Val Tool Kit (CVTK), using the characterization algorithm.

Non-linearity characterization uses a series of variable integration time observations of the solar diffuser and corresponding shutter observations to generate a remapping for every digital number (4096 values per detector) for every detector. This remapping is performed via a Look Up Table (LUT) approach.

The CVT creates the RLUT and keeps it in the IAS database. When published, the RLUT is output to file and cached (Internal Cache) for use in L1 processing.

Section 3 LDCM DPAS Overview

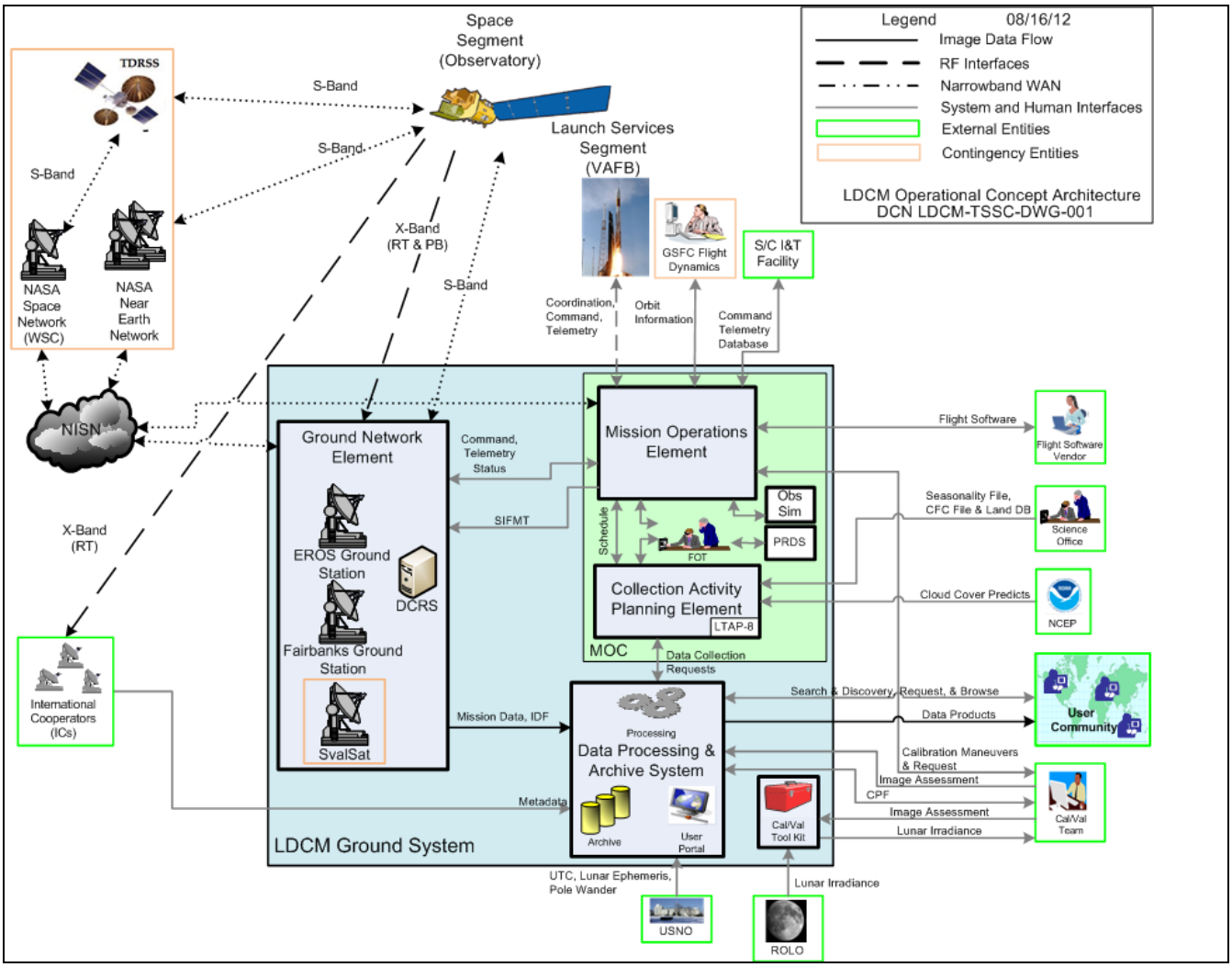

Figure 3-1. LDCM Operations Concept Architecture

LDCM is a remote sensing mission which provides data continuity to the Landsat satellite series global multispectral data collection and distribution. LDCM is a satellite- and ground-based collection providing the following capabilities:

- Global, moderate-resolution, multispectral data collection
-
- Long term LDCM data archiving
- Web-enabled access
- Continued Landsat IC support
- Level 0 (L0) and L1 data products

The LDCM Project consists of three major mission components: the Space Segment (SS), Ground Segment (GS), and Launch Services Segment (LSS). Because LDCM is

a cooperative effort between NASA and the USGS, each agency has specific responsibilities for delivery of major overall mission capabilities.

Figure 3-1 illustrates the overall LDCM architecture and the high-level interfaces and interactions between the mission components. As shown in Figure 3-1, DPAS is a component of the GS.

Fundamentally, the responsibility of the DPAS is data processing, storage, long-term archiving, and data and product distribution for the LDCM.

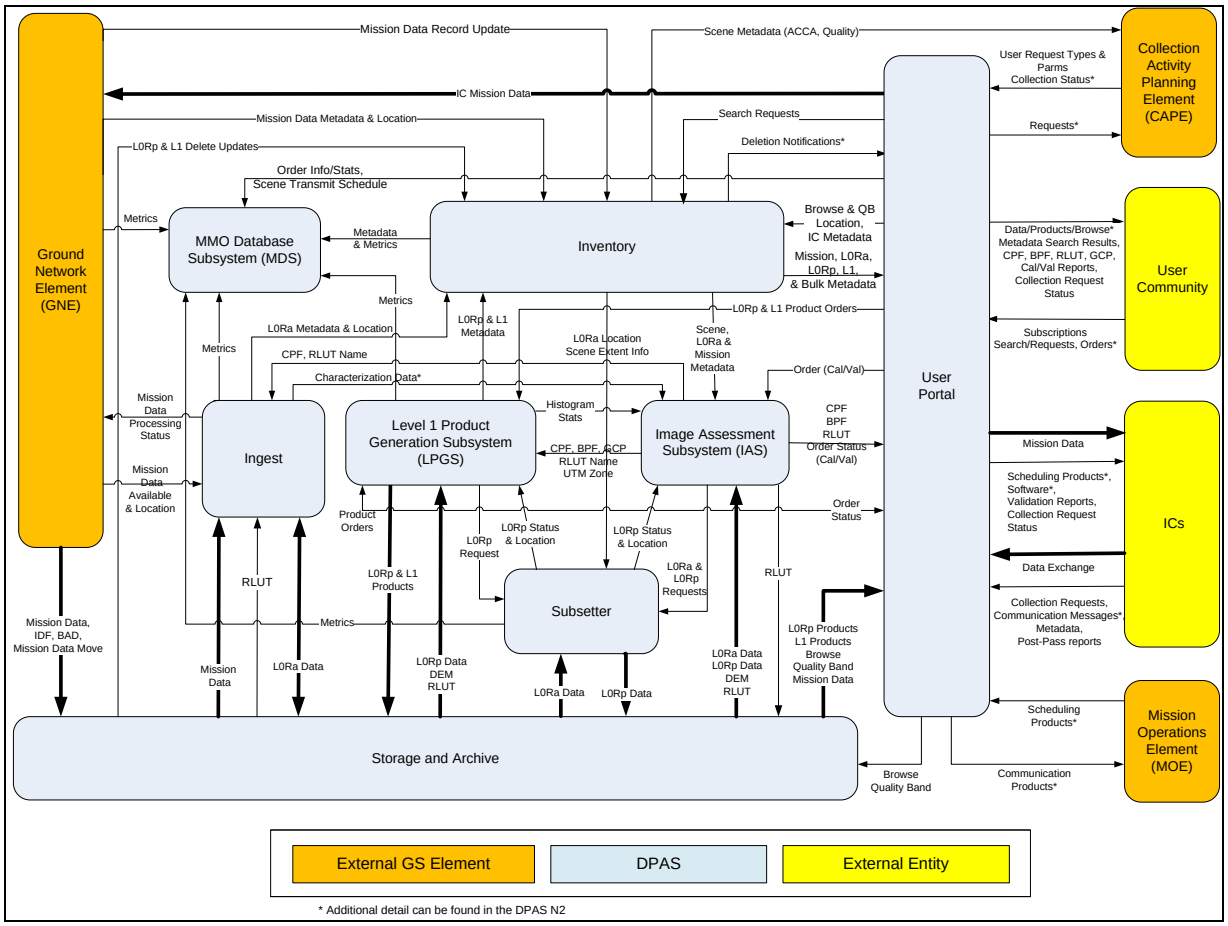

Figure 3-2. DPAS Block Diagram

Figure 3-2 shows data flow interactions among DPAS Subsystems and with entities external to DPAS. The set of externals is not comprehensive in Figure 3-2. A complete interface listing for the DPAS is captured in the DPAS N2 diagram (LDCM-DWG-004 Landsat Data Continuity Mission (LDCM) Data Processing and Archive System (DPAS) N2 Diagram). Figure 3-3 is the context diagram for the DPAS, which provides a complete listing of its external interfaces.

Subsequent sections provide more detailed descriptions of each of the DPAS Subsystems.

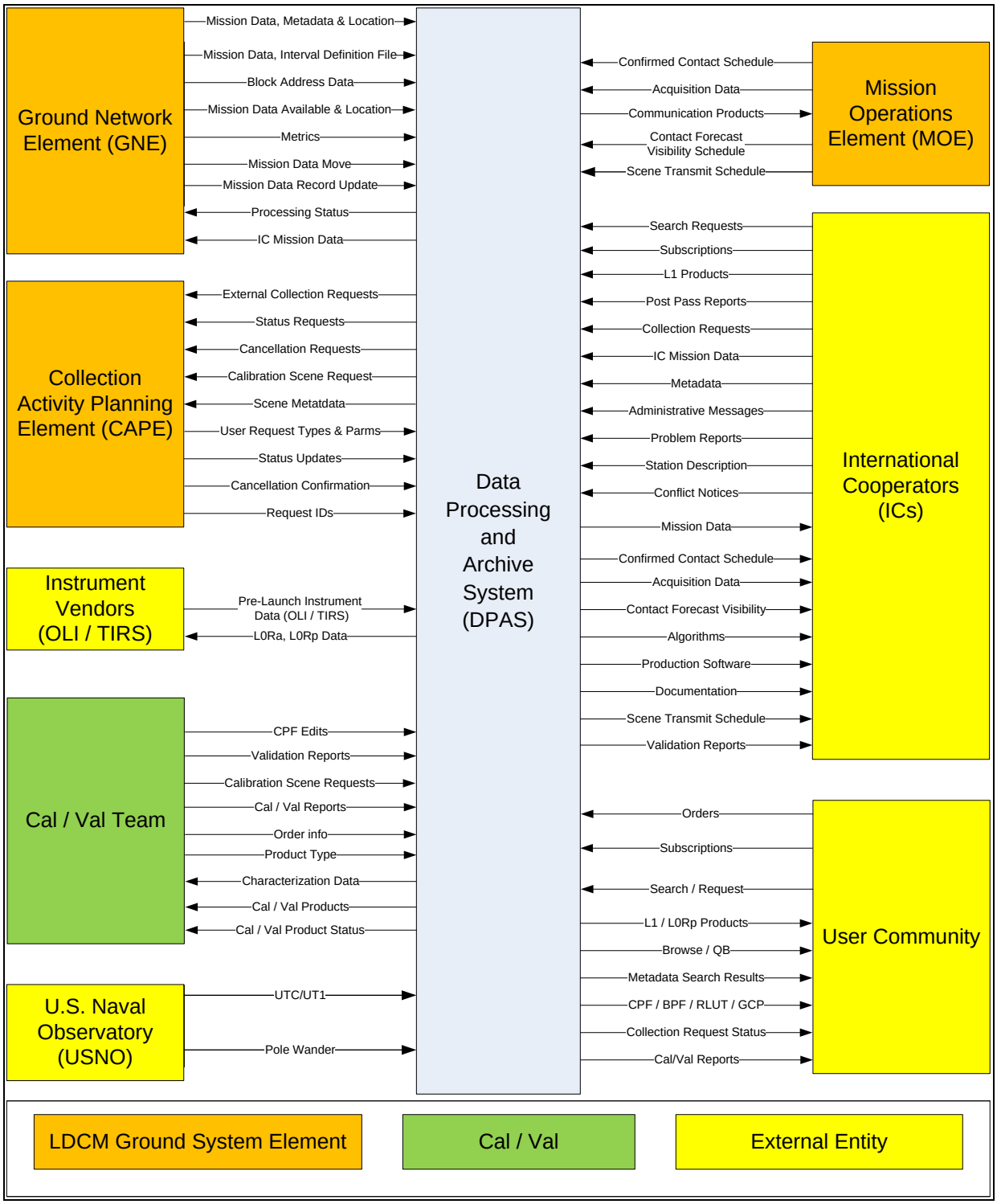

Figure 3-3. DPAS Context Diagram

3.1 Subsystem Descriptions

The DPAS is composed of eight subsystems, as shown in Figure 3-2. A description, block diagram, and context diagram for each Subsystem follow.

3.1.1 Storage and Archive Subsystem (SA)

Storage and Archive (SA) provides shared storage for product distribution and DPAS use, and provides an archive capability for long-term preservation of LDCM data.

SA is designed to be highly automated and requires limited operational support. The primary operational users of the SA are the DPAS Subsystems. External customers do not access SA directly, but receive data via the UP. Engineers need access to the SA for development, analysis, and test activities. System Administrators and Operational support staff require access to the SA for routine administration and monitoring tasks.

The two components within SA are Storage and Archive.

The Storage component provides shared disk storage for the LDCM. It includes an Online Cache and an Internal Cache. The Online Cache hosts data that are available to customers via Web-enabled access. The types of data using the Online Cache include standard products (L1T, L0Rp), FRB, and 8-bit QB. The Internal Cache provides storage space for the DPAS Subsystems. The Internal Cache contains a large-capacity cache for long-term storage of L0Ra data, and a high-performance Processing Cache used for Ingest and LPGS processing. The Processing Cache holds RLUT and DEM data and temporary working files. The Online Cache and Internal Cache consist of high-capacity shared online storage.

The Archive component includes the long-term archive of data collected and generated by the LDCM, including Mission Data, BAD, FRB, 8-bit QB, and milestone backups, documentation, software and test data. The Archive component includes backup copies of data to facilitate recovery from operational data loss. The Archive includes a nearline storage library with an online data cache. This Archive employs robotic media handling, high-density media, offline storage, and Hierarchical Storage Management (HSM) software to manage online, nearline (onsite), and offline (offsite) data.

The Archive component provides the capability to generate offline media for storage at an offsite archive facility for long-term data preservation. The Offsite Archive includes Mission Data, BAD, FRB, 8-bit QB, documentation, software, and milestone backups. The primary purpose of the offsite archive is to safeguard the data for Disaster Recovery / Continuity of Operations. This site adheres to National Archive and Records Administration (NARA) standards to ensure the safety of the archived data.

Figure 3-4 is the block diagram for the SA, which shows the components and major data flows.

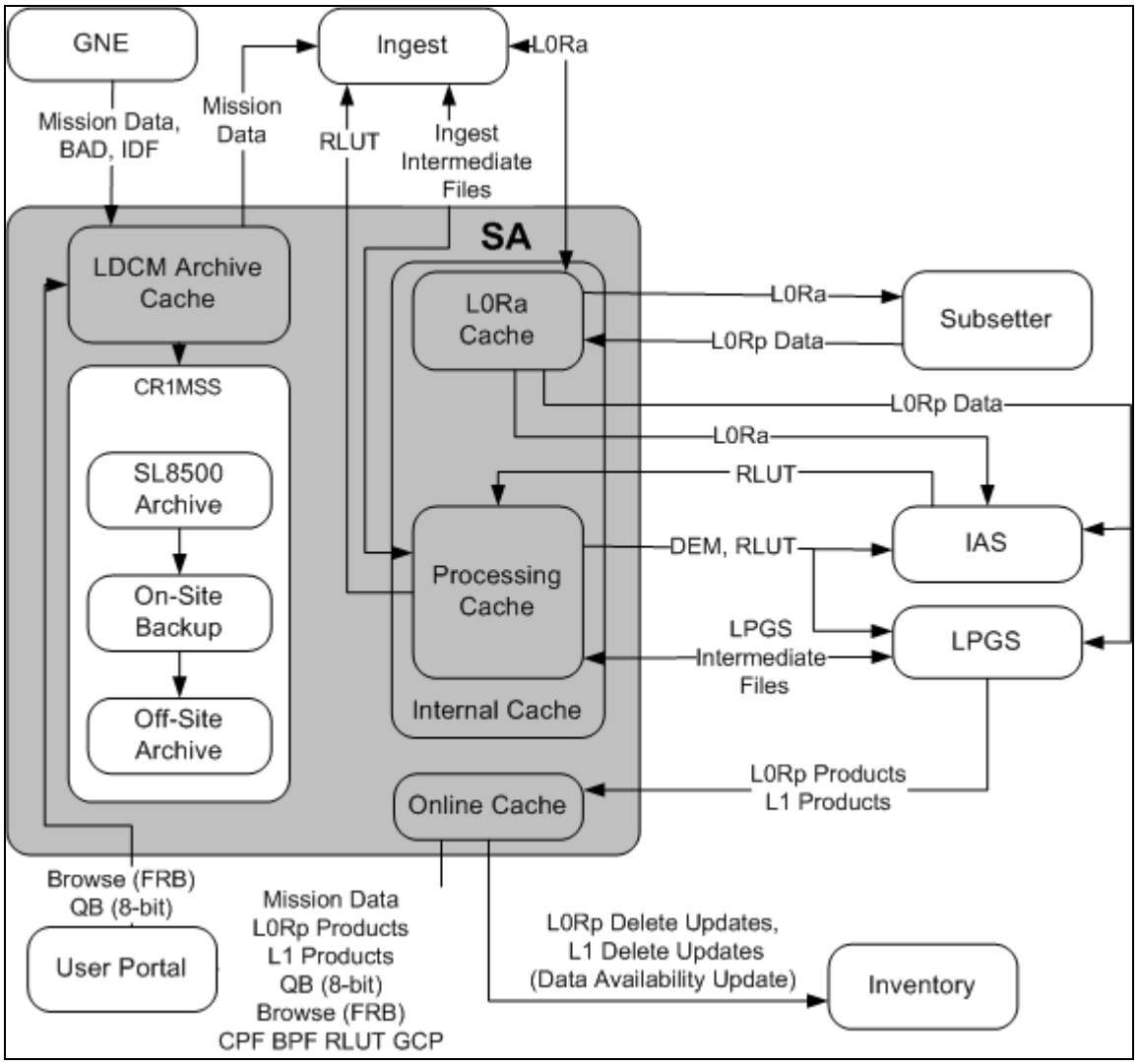

Figure 3-4. SA Block Diagram

Figure 3-5 is the context diagram for the SA, which shows a complete listing of its external interfaces.

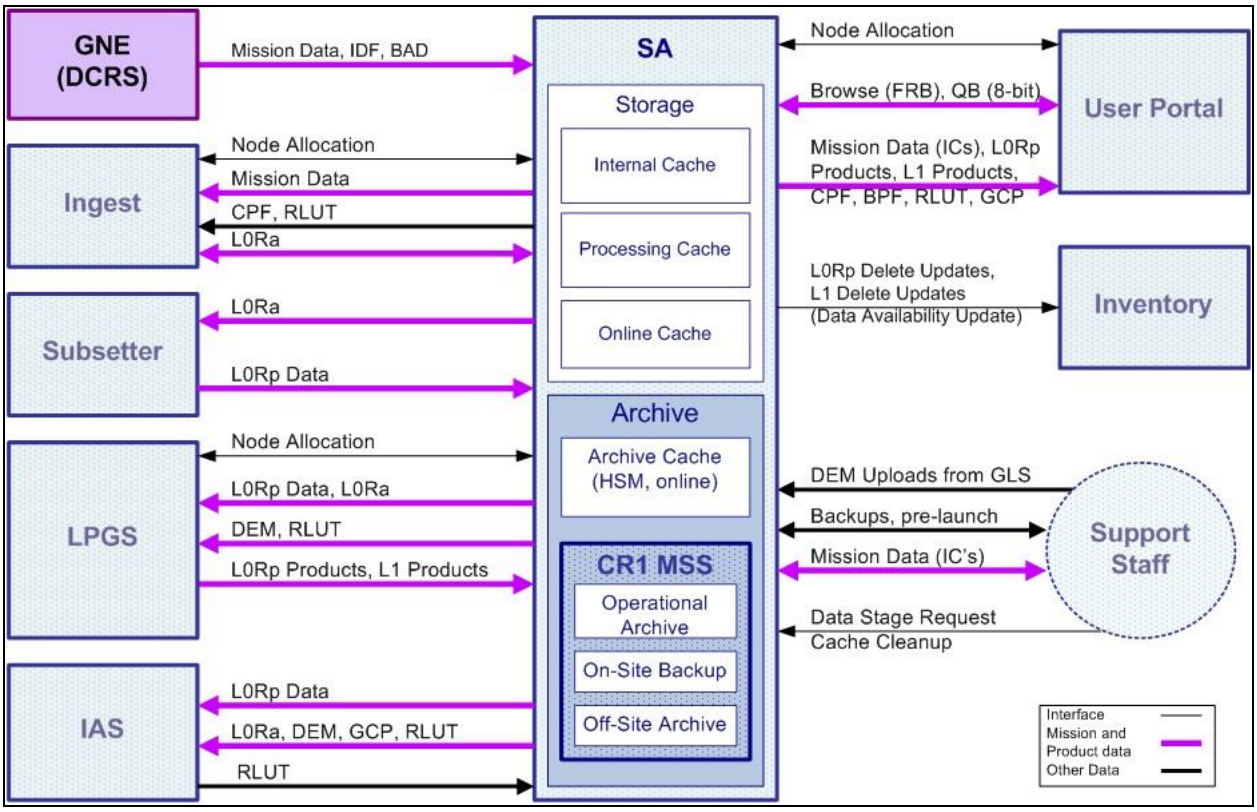

Figure 3-5. SA Context Diagram

3.1.2 Inventory Subsystem (INV)

The LDCM Inventory Subsystem performs two key database functions for the DPAS: a master mission database (LDCM Mission Database (LMD)), and a Searchable Inventory Database (SID).

The LMD component maintains the master copy of mission metadata including Mission Data contents, archive locations for full and reduced resolution browse of the reflective, thermal and quality images, and version information for processing systems. The LMD is designed to support long-term archiving, isolated for security, and a protected resource.

The SID component contains a subset of the LMD information and is highly optimized to support fast product search and ordering. To support data distribution, storage location information within the SID supports enterprise systems like the Tracking, Routing, and Metrics (TRAM) to order creation of products. It also contains location data for 8-bit QB and FRB supporting fast downloads. In the DPAS, the primary user of the SID is the EarthExplorer (EE) Enterprise component of the UP. Operations staff and the Data Manager interact with the Inventory Subsystem via the Operator User Interface (OUI) component.

Figure 3-6 is the block diagram for the Inventory Subsystem.

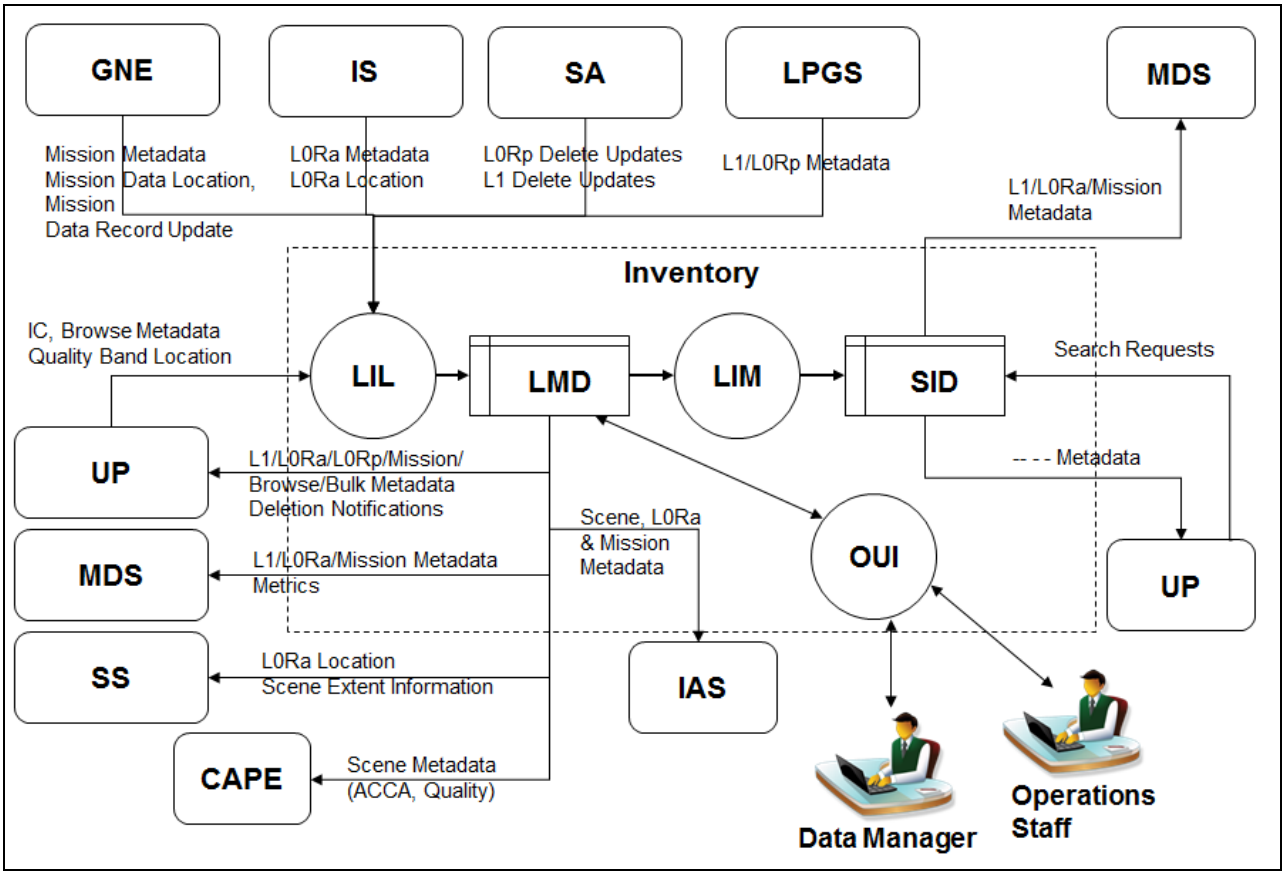

Figure 3-6. Inventory Block Diagram

Figure 3-7 is the context diagram for the Inventory Subsystem, which shows a complete listing of its external interfaces.

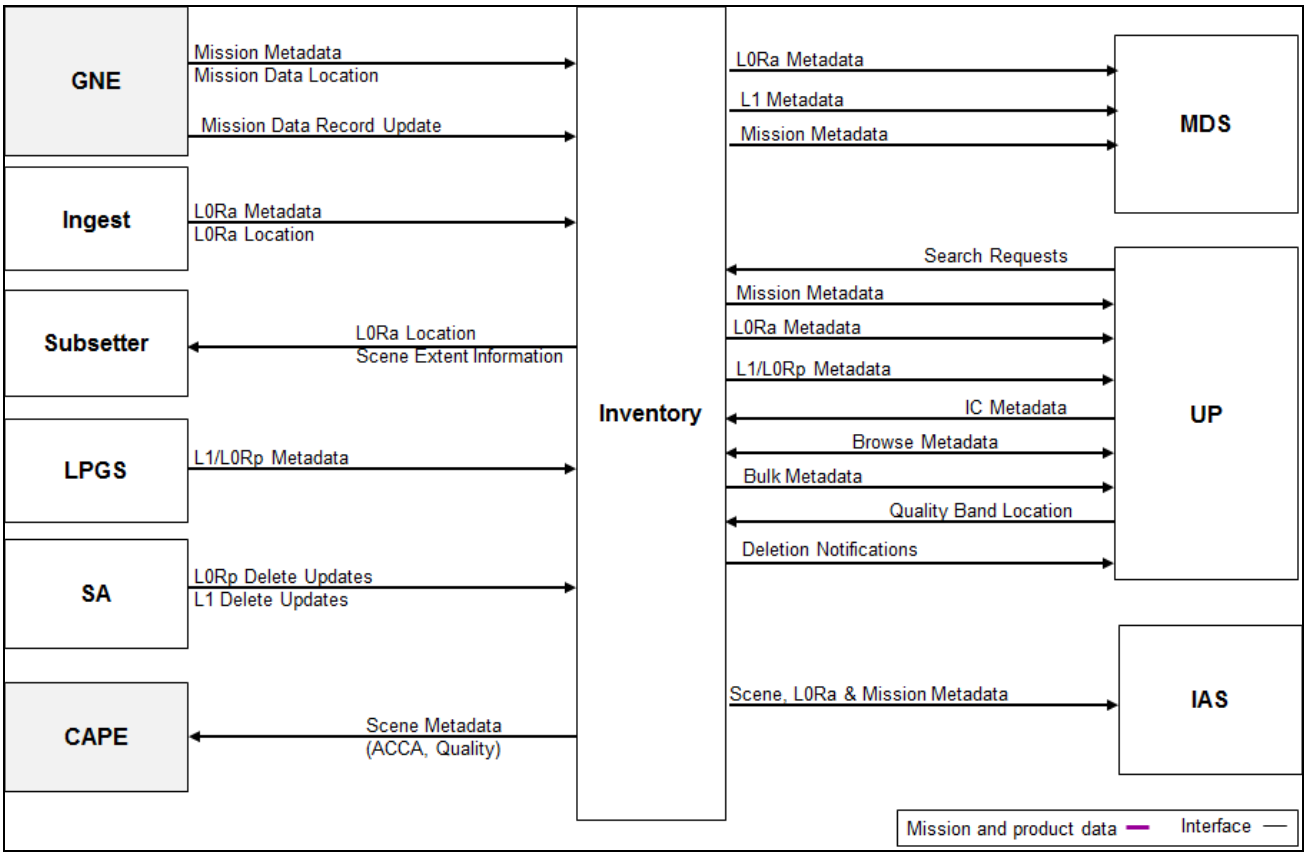

Figure 3-7. Inventory Context Diagram

3.1.3 Ingest Subsystem (IS)

The primary work of the Ingest Subsystem is to format Mission Data retrieved by the GNE into L0Ra data. Along with this formatting, selected data types are analyzed for impulse noise and saturated pixels, data gaps are filled, duplicate lines are eliminated, ancillary data with suspicious timestamps are flagged, metadata are generated, and processing metrics are collected.

- Inputs:
  - Mission Data intervals
  - Calibration Parameters (CPs) for alignment and scene framing
  - RLUT
- Processing:
  - Perform initial quality checks (e.g., Cyclic Redundancy Check (CRC), line and frame headers)
  - Flag suspect timestamps in ancillary data
  - Create interval and scene metadata
  - Format the data for efficient processing

    - Extract and/or calculate sensor, spacecraft, and image statistics
- Outputs:
    - L0Ra intervals and metadata
    - Standardized characterization data to IAS DB
    - Bias Parameters (BPs) for product generation

Figure 3-8 is the block diagram for the Ingest Subsystem, showing the components and major data flows.

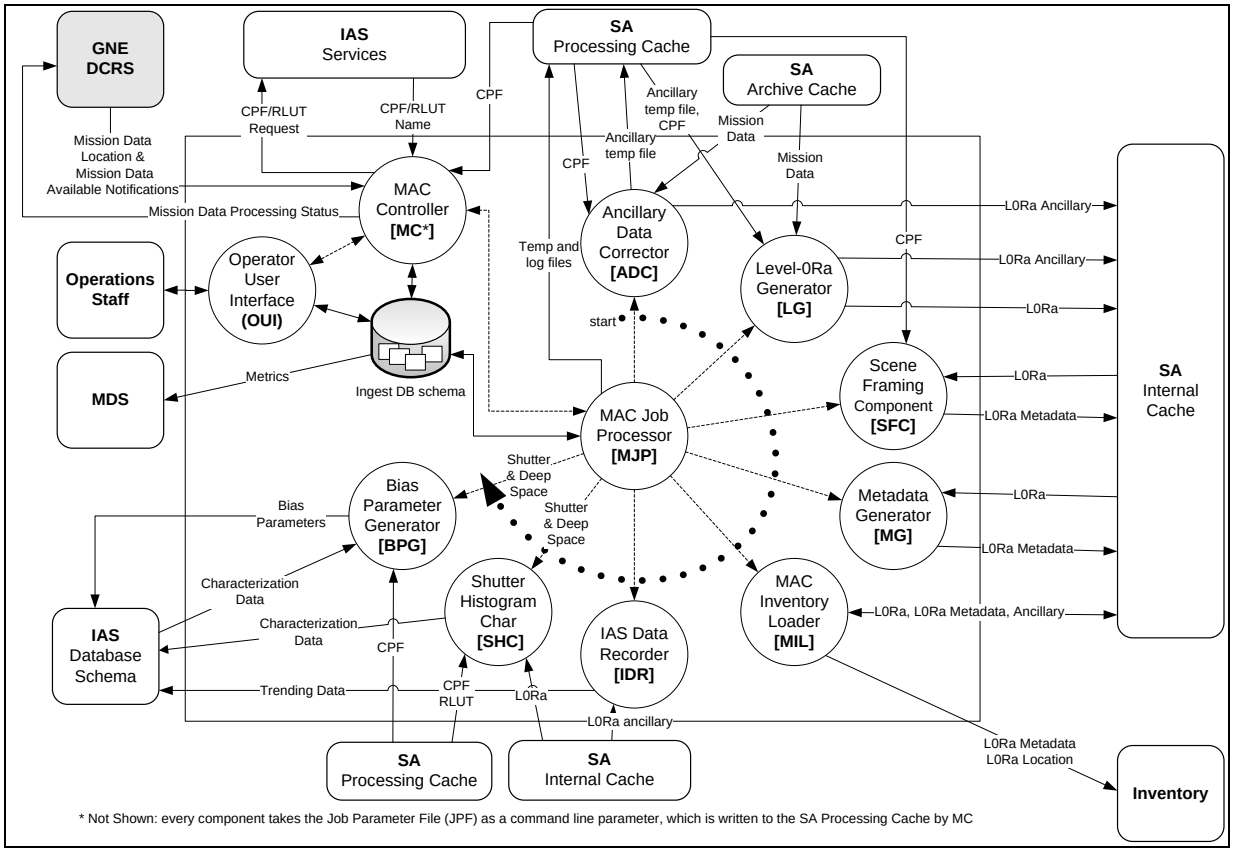

Figure 3-8. Ingest Block Diagram

Figure 3-9 is the context diagram for the Ingest Subsystem, which shows a complete listing of its external interfaces.

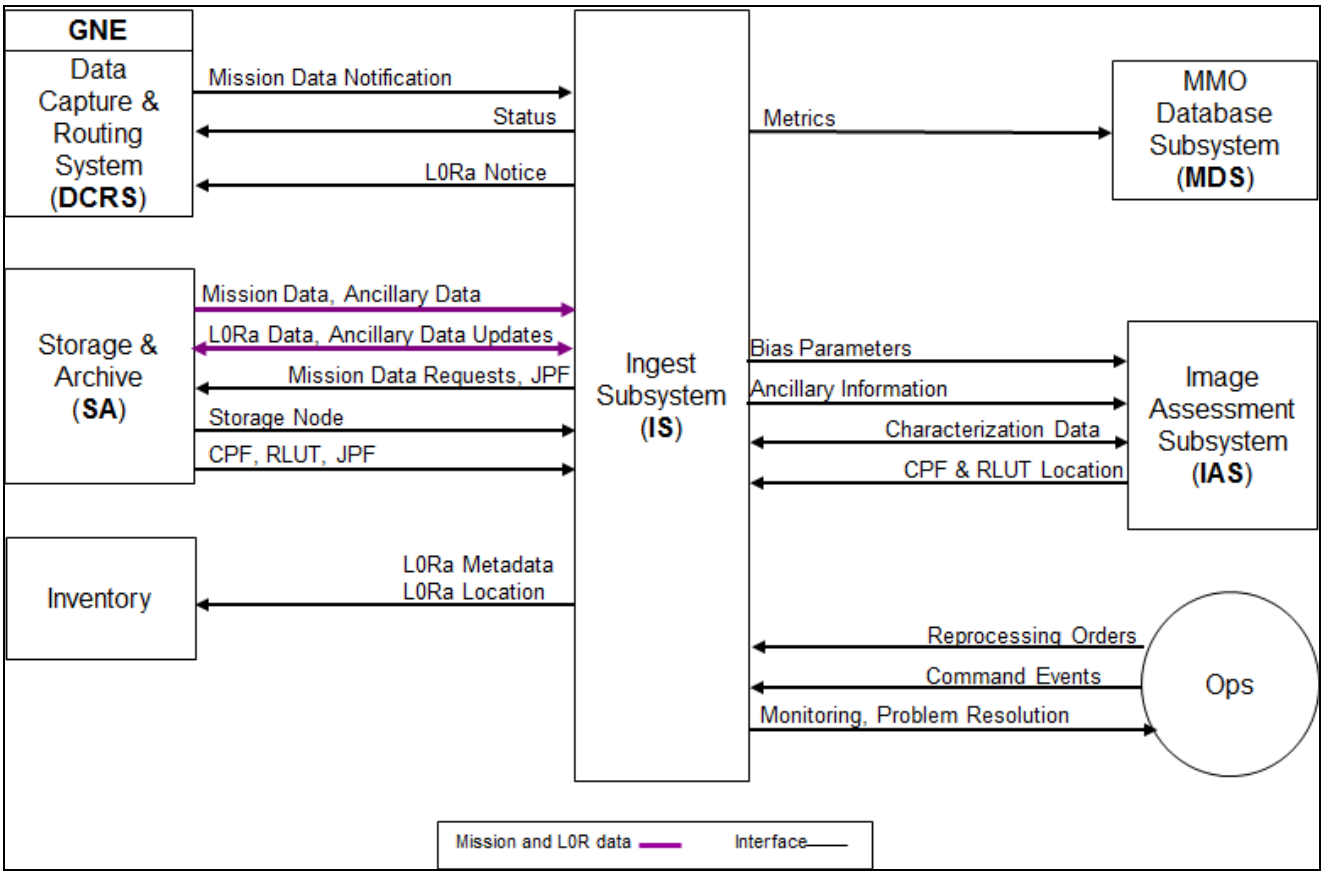

Figure 3-9. Ingest Context Diagram

3.1.4 Subsetter Subsystem (SBS)

The Subsetter Subsystem extracts L0Rp data from L0Ra data. Requests are received from calling systems via a database entry. The Subsetter Controller monitors the database for new requests and initiates the OLI / TIRS Subsetter for each request. L0Rp data (L0Ra if the request is for an interval) are staged to the Internal Cache and the requestor is notified of processing completion (L0Rp status) and the location of the data.

Figure 3-10 is the block diagram for the Subsetter Subsystem, which shows the components and major data flows.

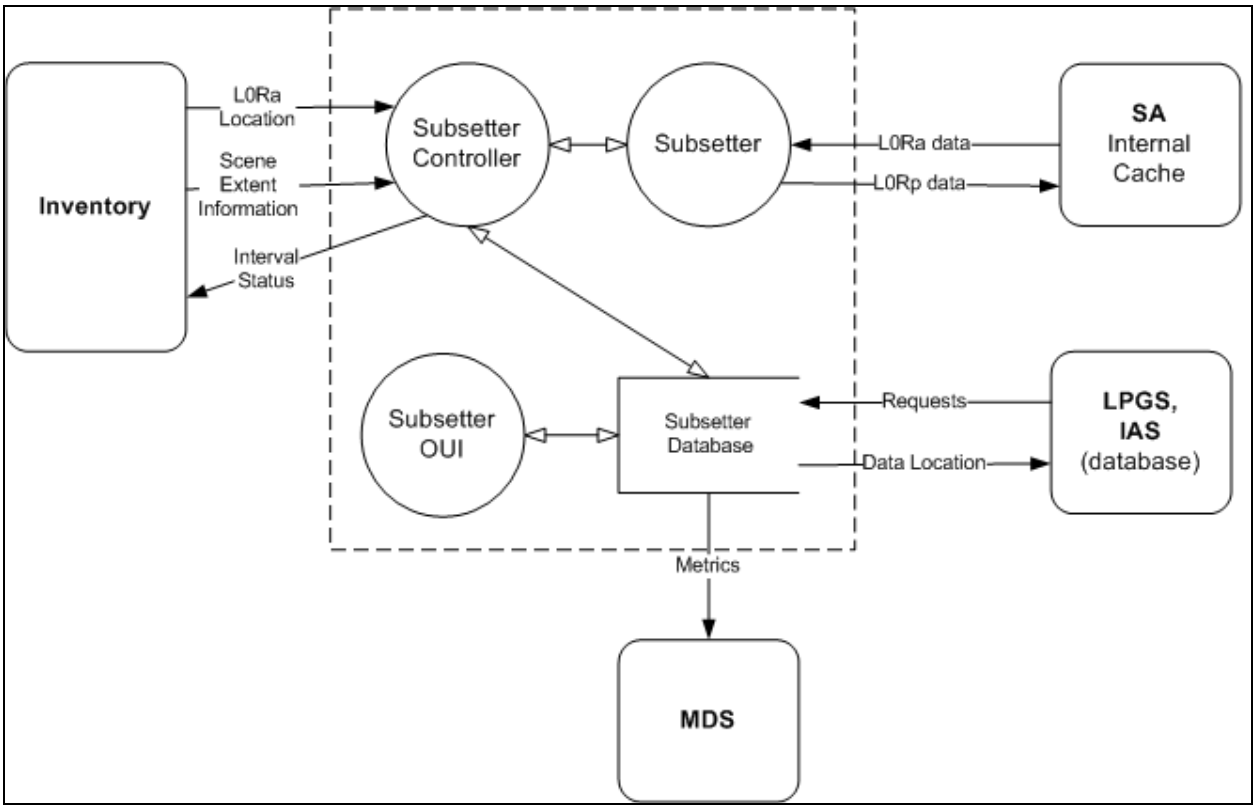

Figure 3-10. Subsetter Block Diagram

Figure 3-11 is the context diagram for the Subsetter Subsystem, which shows a complete listing of its external interfaces.

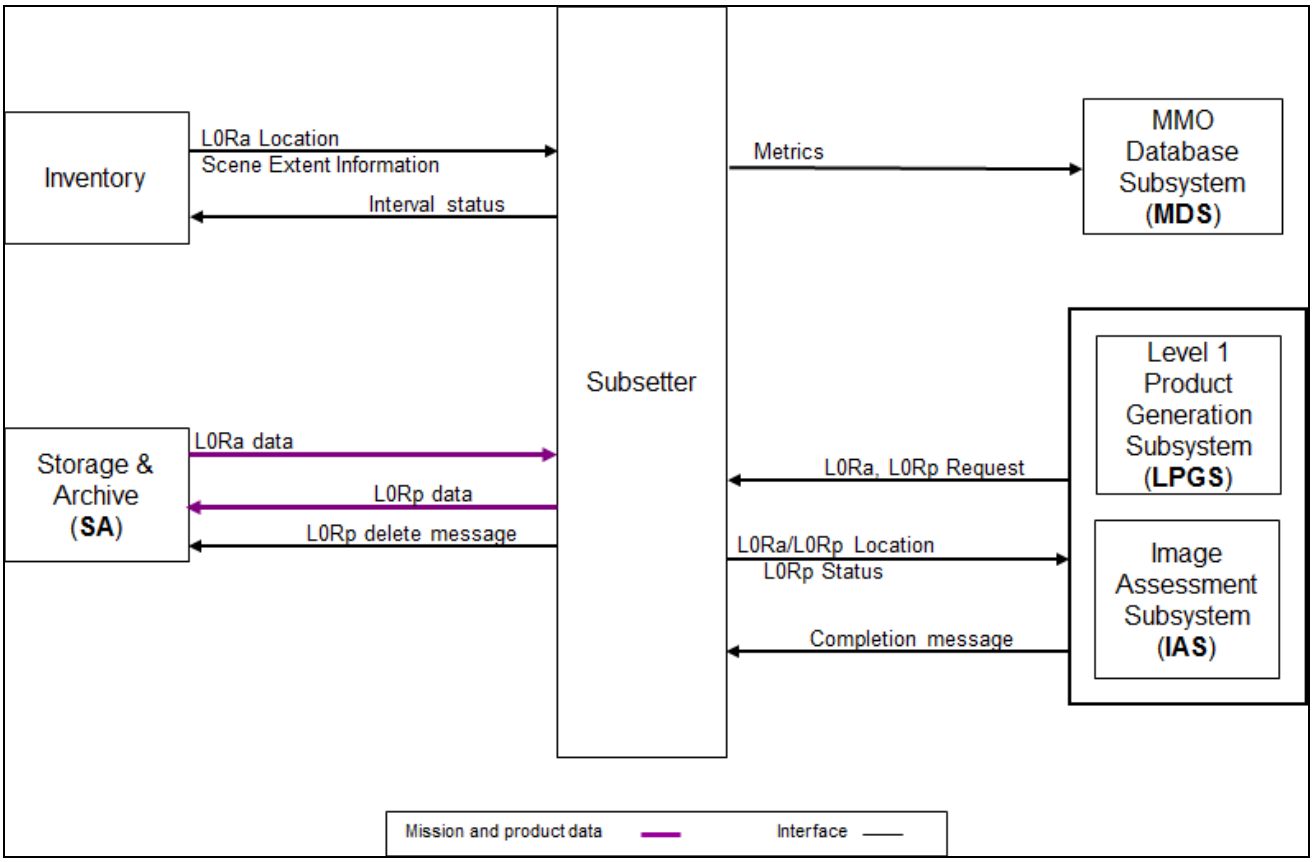

Figure 3-11. Subsetter Context Diagram

3.1.5 Level 1 Product Generation Subsystem (LPGS)

The LPGS generates L1 data products. The LPGS uses the same algorithms to generate L1 products that the IAS uses within its L1 processor. This allows the LPGS to provide identically calculated characterization data to the IAS for trending and analysis.

Figure 3-12 is the block diagram for the LPGS, which shows the components and major data flows.

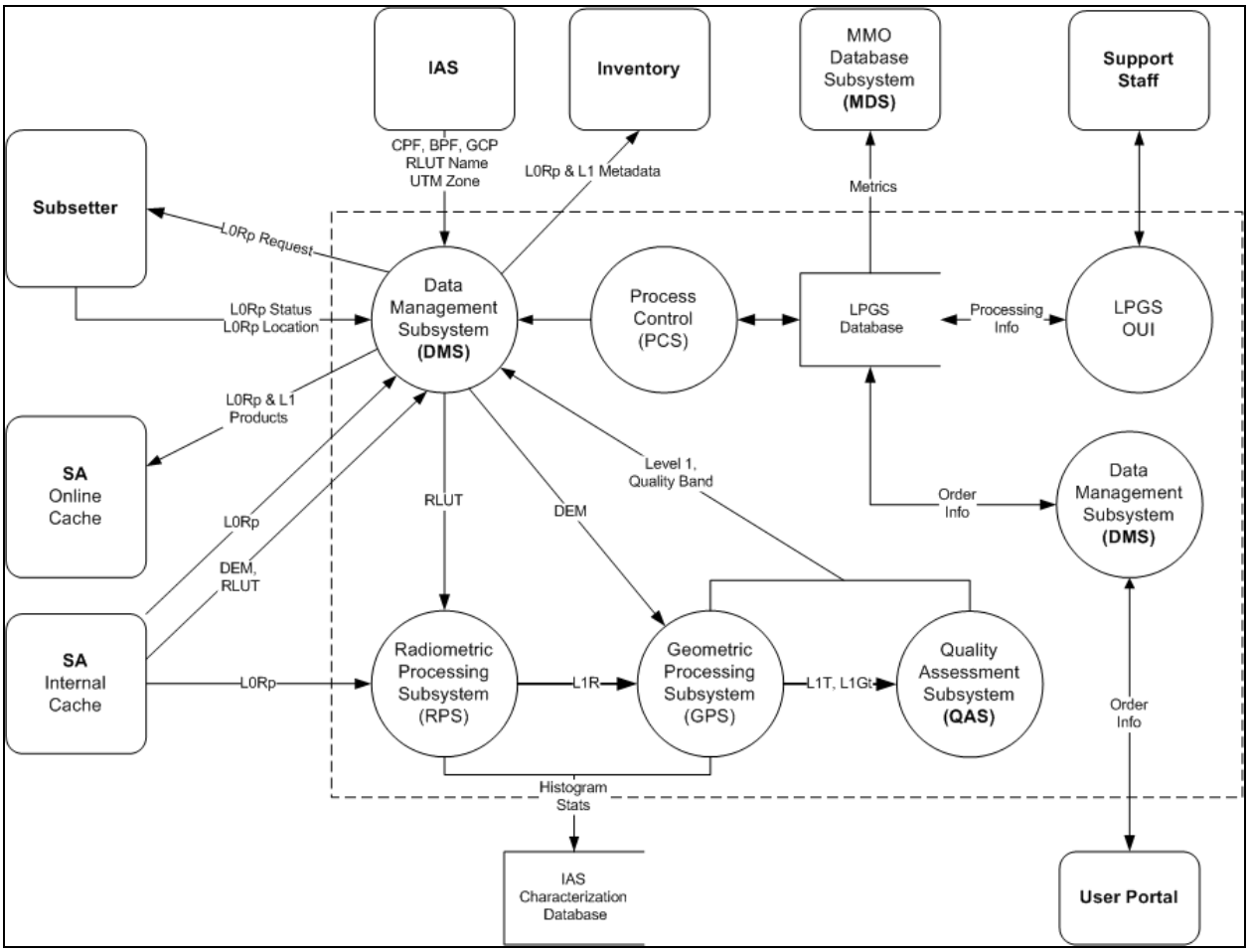

Figure 3-12. LPGS Block Diagram

Figure 3-13 is the context diagram for the LPGS, which shows a complete listing of its external interfaces.

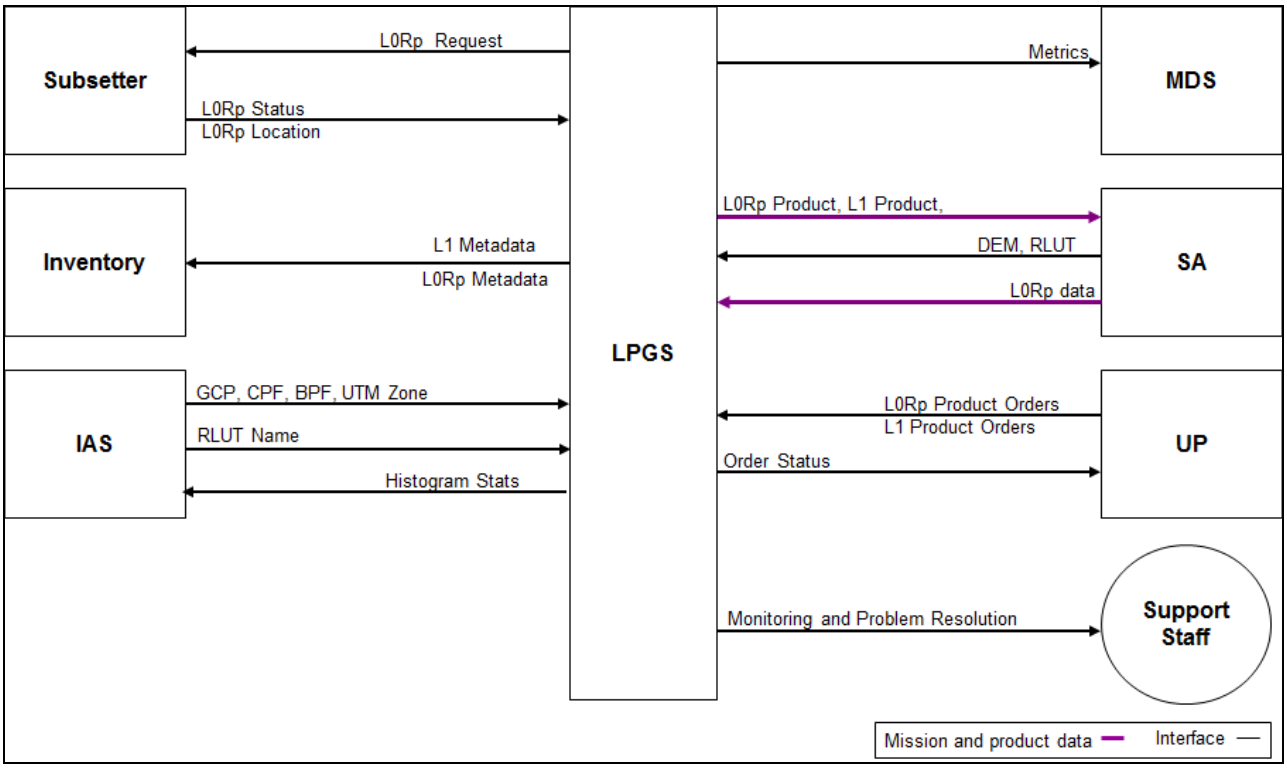

Figure 3-13. LPGS Context Diagram

3.1.6 Image Assessment Subsystem (IAS)

The IAS is responsible for the offline assessment of image quality to ensure compliance with the radiometric and geometric requirements of the spacecraft and the sensors throughout the life of their respective missions. Operational activities occur at the USGS Earth Resources Observation and Science (EROS) Center; less frequent assessments and calibration certifications occur at the Landsat Project Science Office, which is located at the Goddard Space Flight Center (GSFC) in Greenbelt, Maryland.

The IAS characterizes radiometric and geometric artifacts through a series of algorithms. The outputs of the algorithms and their statistics are captured in a relational database for trending, analysis, modeling, and calibration. The IAS processes up to 40 scenes per day for image quality assessment, radiometric and geometric calibrations and characterizations, and artifact correction.

Figure 3-14 is the block diagram for the IAS, which shows the components and major data flows.

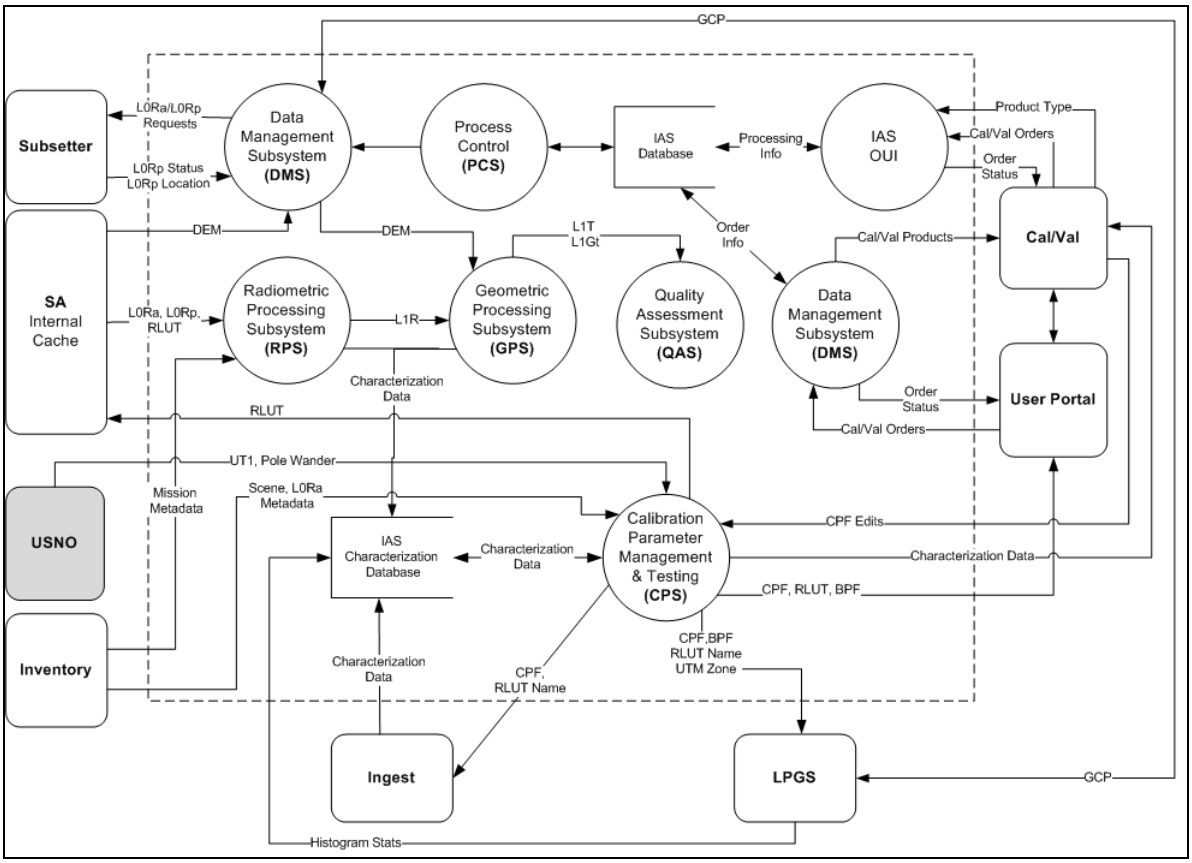

Figure 3-14. IAS Block Diagram

Figure 3-15 is the context diagram for the IAS, which shows a complete listing of its external interfaces.

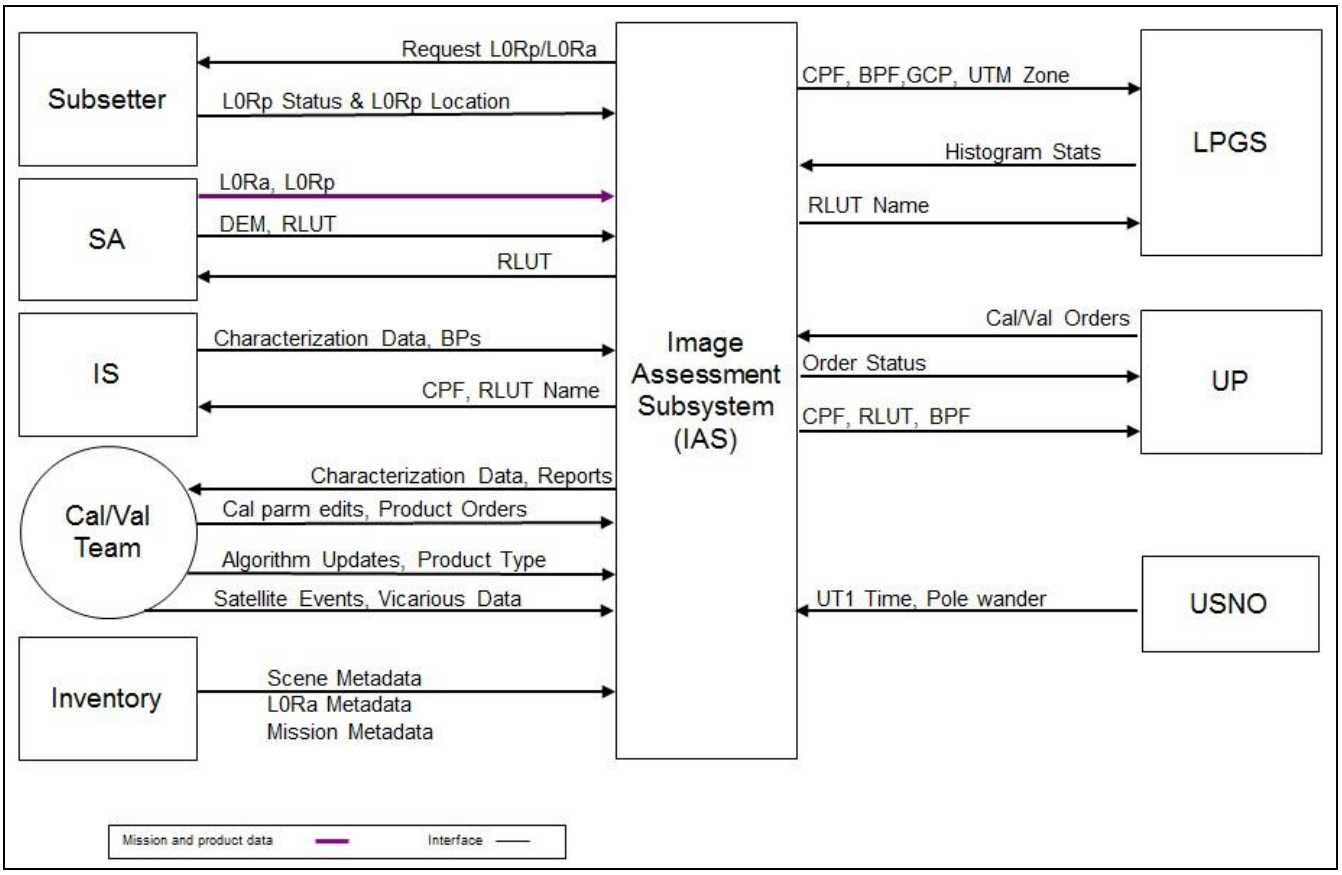

Figure 3-15. IAS Context Diagram

3.1.7 User Portal (UP) Subsystem

The UP provides multiple access points to the user community, Cal/Val analysts, and support staff. By providing a variety of access mechanisms, both internal and external data consumers have efficient means to discover LDCM data, obtain information, metadata and browse, request and receive products, and submit feedback. To accomplish such operations, the UP has been functionally decomposed into six components: Project Web Site, Data Access Tool (Earth Explorer), Order (Tracking, Routing, and Metrics system), Registration, UP Services, and International Cooperators exchange and validation cache (Exchange Cache).

The Project Web Site and Data Access Tool are internal to the DPAS architecture and provide a mechanism for users to request information and products. Clients external to DPAS can request LDCM metadata, browse, and standard products using Open Geospatial Consortium (OGC) and Web services provided by the Services component. Registration and Services components serve both internal and external requests, while the Order component only supports requests initiated from EE. The Exchange Cache

component is a temporary storage area for pickup and delivery of IC validation and exchange data.

Figure 3-16 shows the components and major data flows of the UP.

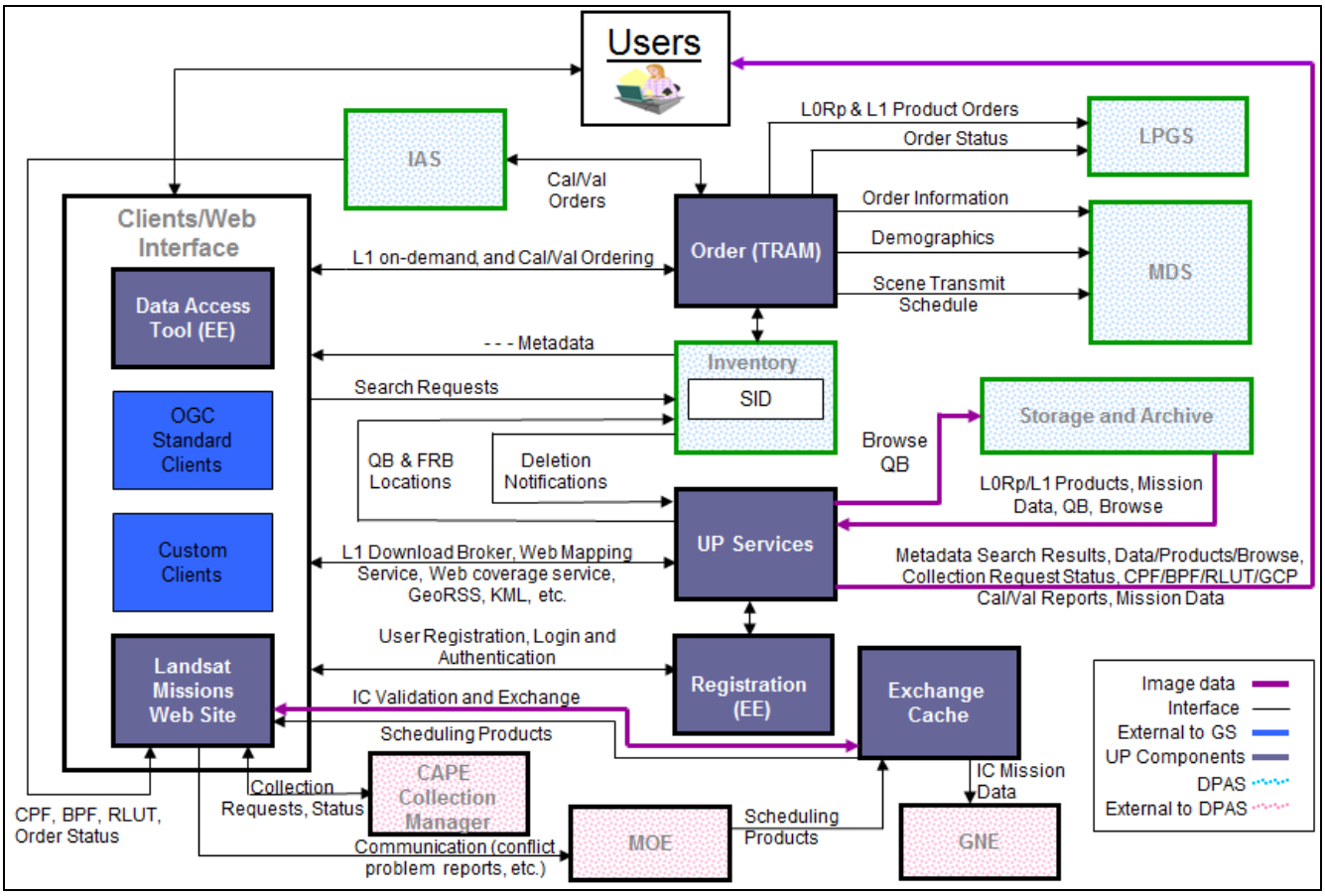

Figure 3-16. User Portal Block Diagram

Figure 3-17 shows external interfaces to the UP.

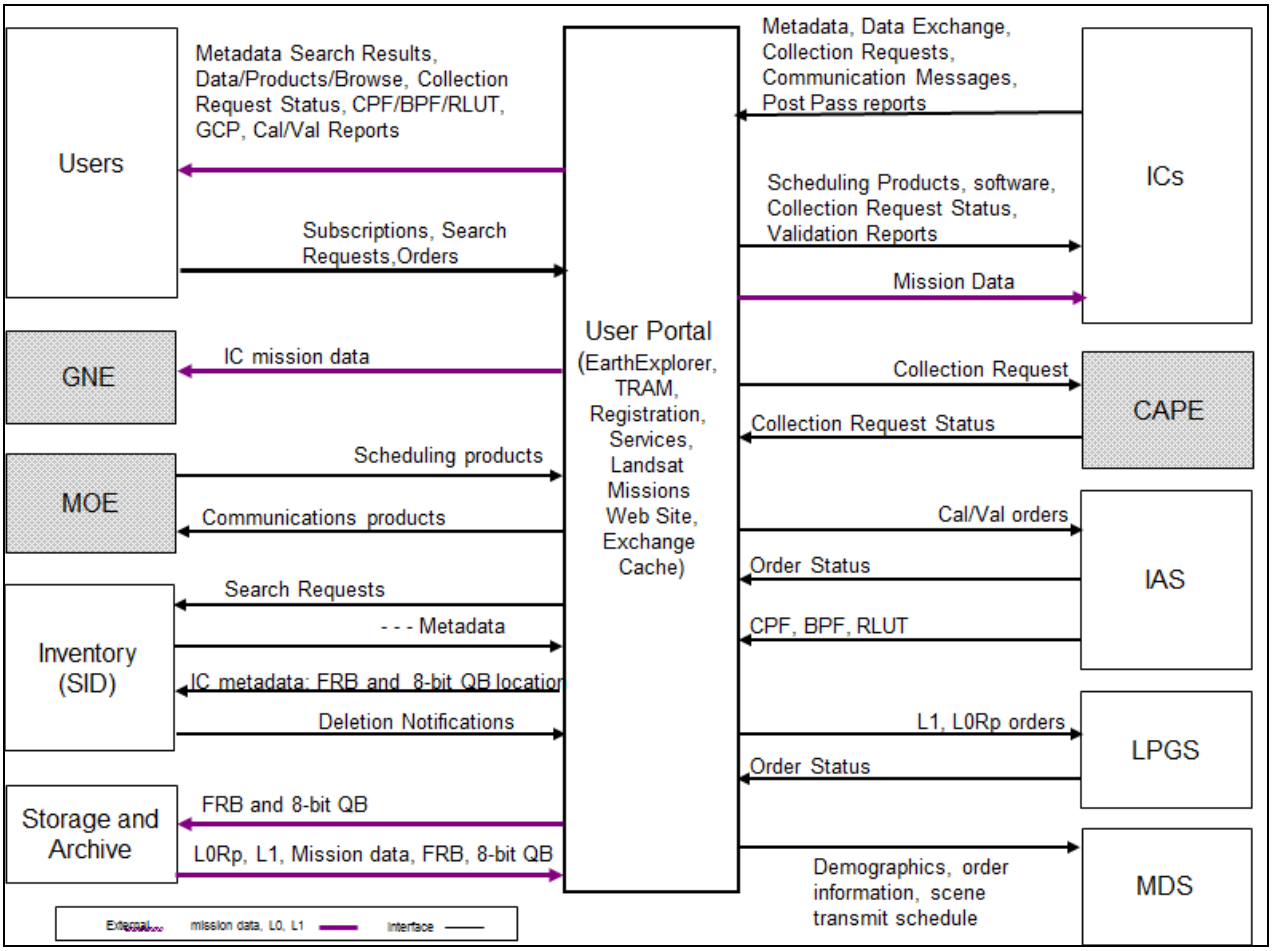

Figure 3-17. User Portal Context Diagram

3.1.7.1 Earth Explorer (EE)

EE is a Web portal into the vast archive of land remote sensing data available from the USGS EROS archive. The archive includes over four million satellite images (1960 to present) and over eight million aerial photographs (1939 to present). EE supports both registered users and the public with access to over thirty data collections. Online help is available, and customers can search the archive using geographic coordinates, place names, zip codes, or unique parameters exclusive to each collection. EE provides cross-inventory searches of these collections. Most of these collections include online browse references. It also provides and supports various services, such as the generic USGS shopping basket and user registration functionality. The Long Term Archive (LTA) Project manages the EE as an enterprise solution.

3.1.7.2 Tracking, Routing, and Metrics (TRAM)

Tracking, Routing, and Metrics (TRAM) component provides a Web service based interface for accepting orders from multiple clients and routing them to the correct production system. The TRAM provides status on orders, manages demographics

information derived from orders, and gathers information passing through the system for management reports. The LTA Project manages the TRAM.

3.1.8 Mission Management Office (MMO) Database Subsystem (MDS)

To support Landsat Project operations, the MDS provides mission status information that the Landsat Project requires for managing and directing Project activities. This information includes statistics to track product generation and data distribution. In addition, the Landsat Project management and contractor staff use this information to manage the Project and to track its status. Fundamental to MDS processing is Extract, Transform, Load (ETL), whereby data from different subsystem databases are obtained and organized for analysis.

Figure 3-18 shows MDS components and major data flows.

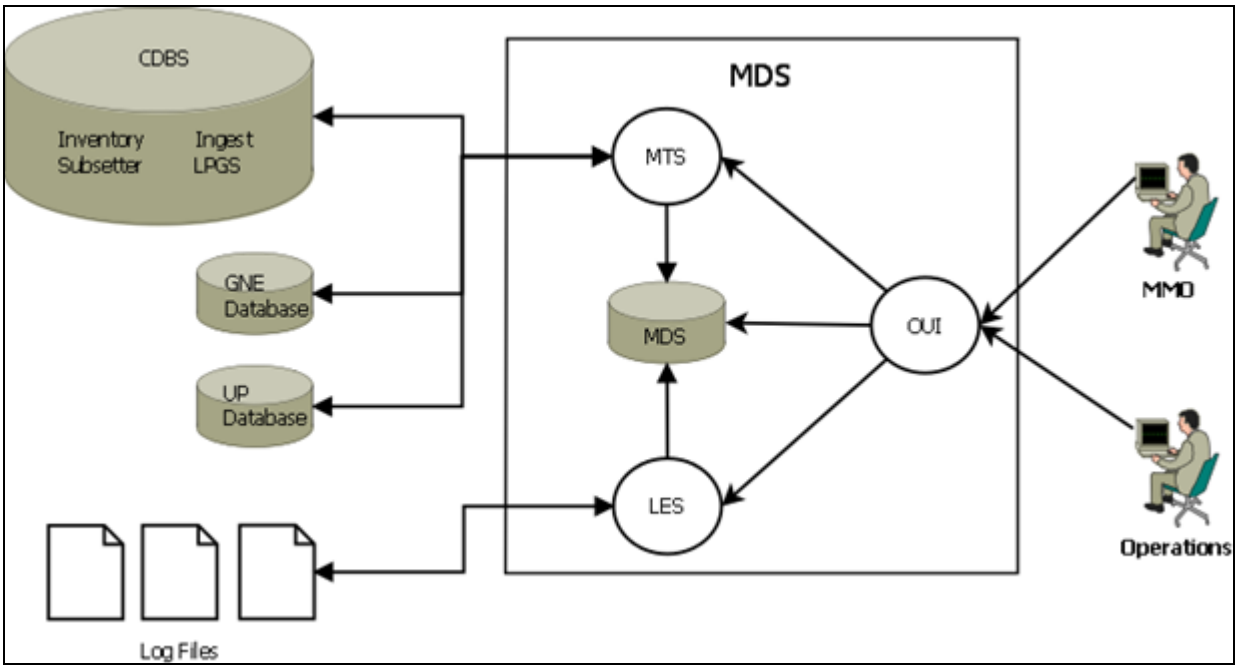

Figure 3-18. MDS Block Diagram

Figure 3-19 shows the MDS external interfaces.

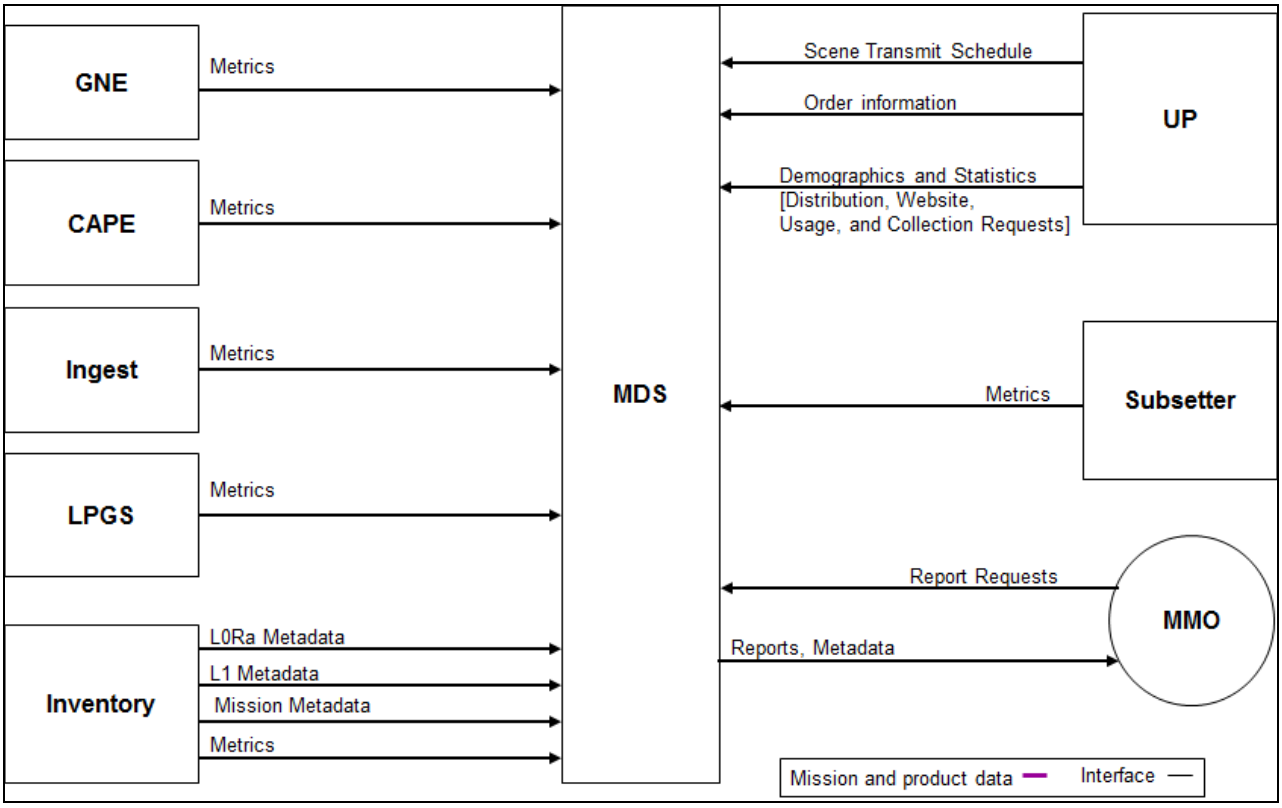

Figure 3-19. MDS Context Diagram

3.2 Priority Processing

The DPAS supports a priority processing mechanism that enables jobs to be processed in a fashion that supports day-to-day concurrent processing of high priority products and the processing of backlogs from system outage events. Priority product generation supports both emergency response and Cal/Val requests, while priority ingest processing supports priority collection requests and the processing of data input backlogs. Figure 3-20 illustrates the priority processing mechanism of the DPAS.

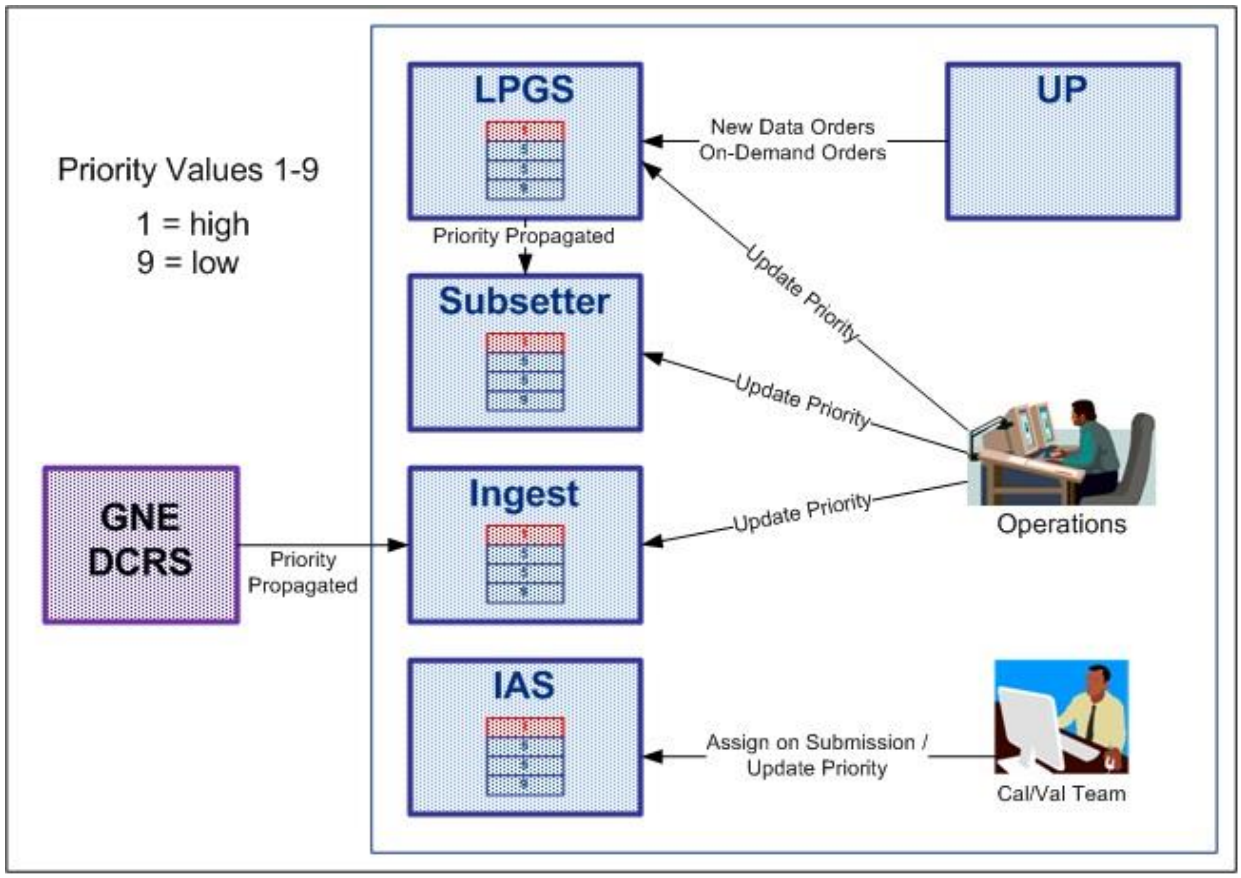

Figure 3-20. Priority Processing

GNE (DCRS), UP, LPGS, IAS, Ingest, and Subsetter Subsystems support priority processing. The GNE / DCRS and the UP assign priorities to processing jobs based on priority collections or priority product requests. The priority values are from 1 to 9, with 1 being the highest priority. The Ingest, Subsetter, LPGS and IAS Subsystems each contain a processing queue. Jobs of equal priority in each queue are processed in oldest to newest order. At any time prior to actual processing, an Operator may change the priority of a job via the OUI of the Ingest or LPGS Subsystem. In this manner, both the day-to-day concurrent processing needs as well as priority processing needs are accommodated. (See subsection 4.1.2 for additional information on concurrent processing activities of the DPAS.)

Section 4 DPAS Operations

4.1 Data Processing, Archive, and Distribution Operations

On a daily basis, the LDCM data processing and archive facility at USGS EROS ingests and processes at least 400 collected image scenes to L1 products. Mission Data are archived and L0Rp and L1 products are made available for download by users. Data processing, archive, and distribution operations are conducted in parallel with the current Landsat operations capability whenever possible.

4.1.1 Operations Facility Layout

DPAS Operations exists within an expanded operations area at EROS. This expanded area contains both the LDCM (L8) and Landsat (L5/L7) operations. Figure 4-1 illustrates the conceptual layout of the operations area.

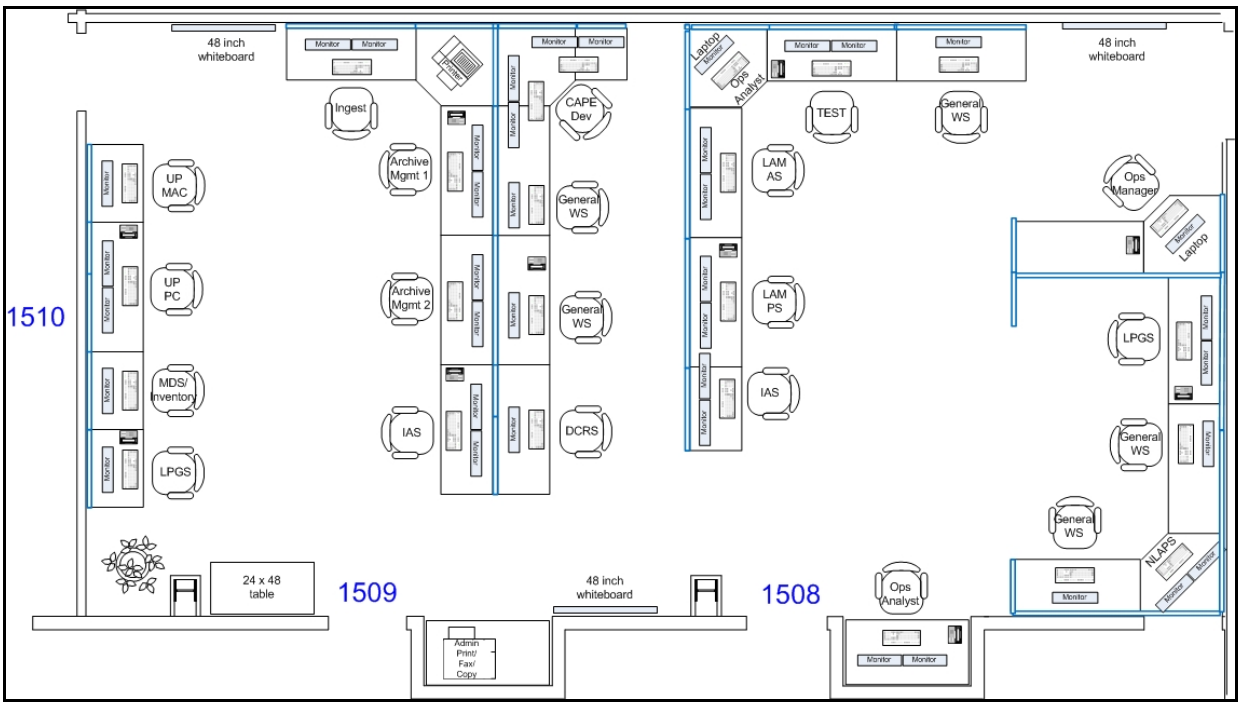

Figure 4-1. Operations Facility Layout

As shown in Figure 4-1, DPAS Operations are conducted in the room 1509 area of EROS. A series of workstations with combinations of single and dual head displays are used to perform the day-to-day operational activities. Landsat operations are conducted in the room 1508 area of EROS. Close proximity of the DPAS and Landsat operations teams ensures good communication and coordination.

4.1.2 Day In The Life (DITL) Overview

It is anticipated that DPAS Operations staff will be employed on a shift schedule of 19 hours per day during the work week and 10 hours per day on the weekend. Because DPAS Operations are to be conducted 24x7, system automation is required in the

DPAS design. DPAS Operations is primarily an oversight and system monitoring activity. Figure 4-2 presents a Day-In-The-Life (DITL) timeline for DPAS Operations, listing the operational activities of the DPAS Operations staff and the DPAS Subsystems.

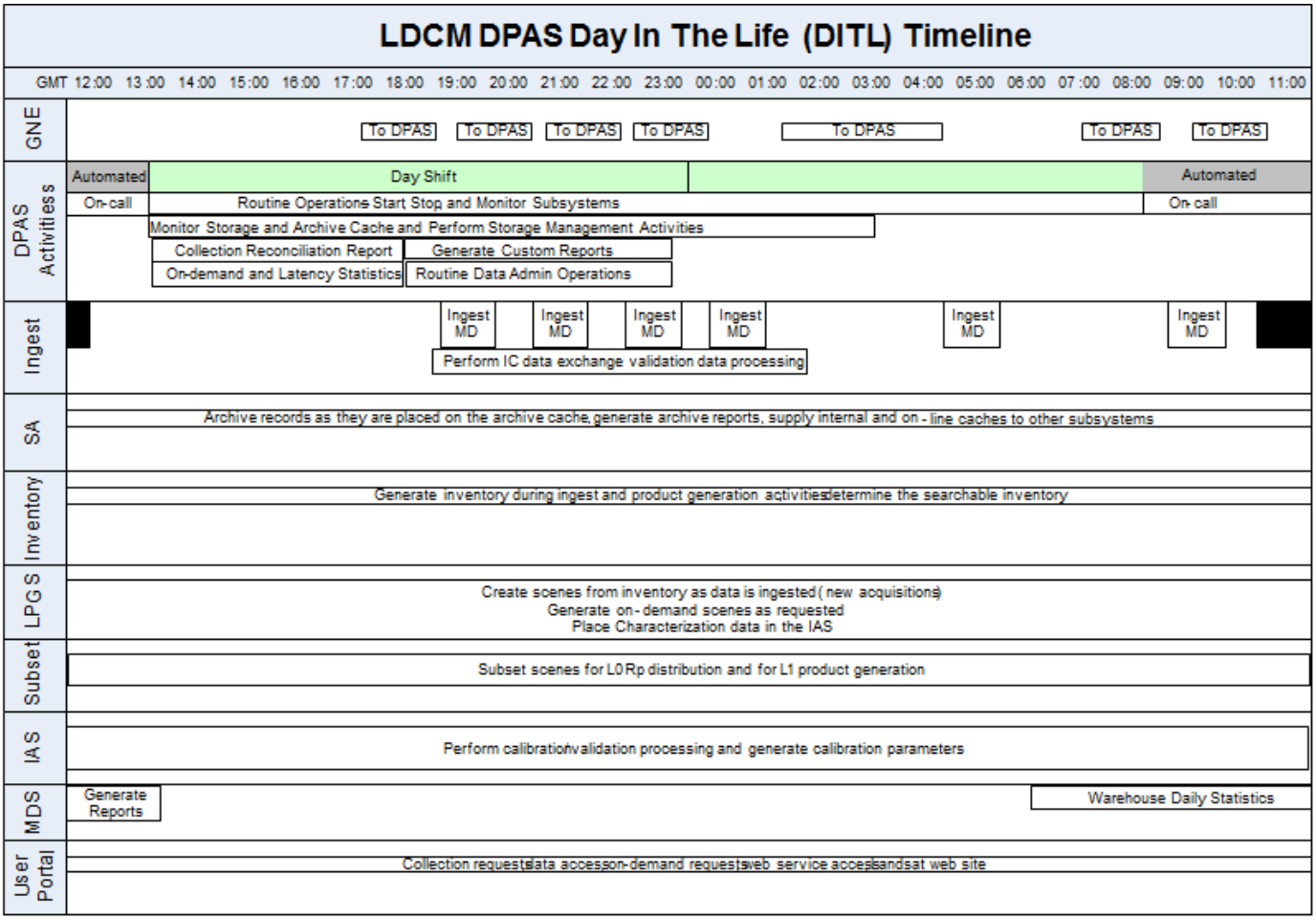

Figure 4-2. Day-In-The-Life (DITL) Timeline

DPAS Operations start, stop, and monitor the Subsystems, as well as monitor storage cache usage and operational statistics to ensure that the required DPAS throughput, latency, and availability requirements are met on a daily basis. In addition, DPAS Operations monitors application OUIs and processing log files for errors for both attended and unattended times. Finally, select DPAS Operational staff is on-call during unattended hours in the event of a system failure, which would be noted and reported by System Administrators or Data Processing and Capture Facility staff. In all aspects, DPAS Operations communicates status via a daily morning status meeting each week day with information passed to the MMO.

4.2 Operational Roles

4.2.1 DPAS Operators

The DPAS Operators monitor all DPAS activities, including the jobs being processed and the status of the Subsystems. The DPAS Operators are provided with the functionality to start, stop, suspend, and monitor processing. If any problems arise with the Subsystems, the DPAS Operators notify the appropriate support staff. If any quality issues are identified with the products, a Cal/Val Analyst is notified.

4.2.2 Data Management Personnel

Data Management personnel are responsible for monitoring the inventory, reconciling metadata, and ensuring the inventory reflects archived holdings. Data Managers follow accepted procedures and practices for LDCM Configuration Management (CM).

4.2.3 Software Developers

Software Developers perform routine and emergency bug fixes, upgrades, and additional release support. Software Developers also build new software to accommodate change requests and software enhancements. Software Developers follow accepted procedures and practices for CM.

4.2.4 System Engineers

System Engineers perform failure detection and correction, and plan new hardware and software to accommodate change requests. System Engineers also develop procedures and practices for CM and formal system integration and test.

4.2.5 System Administrators

System Administrators perform system and capacity monitoring, failure detection and correction, operating system support, operating system upgrades, backup configurations, and support system security initiatives and testing.

4.2.6 Hardware Engineers

Hardware Engineers are responsible for all DPAS hardware, networking, capacity and upgrade planning, failure detection and correction, and equipment setup and deployment. Hardware Engineers also coordinate new hardware and software to accommodate change requests. Hardware Engineers follow accepted procedures and practices for procurement and system integration.

4.2.7 Database Administrators

Database Administrators perform database capacity and performance monitoring, failure detection and correction, database upgrades, backup configurations, and support database security initiatives and testing.

4.2.8 Calibration/Validation (Cal/Val) Analysts

The Cal/Val Analysts' primary function is to ensure the radiometric, geometric, and spatial quality of remotely sensed imagery. The Cal/Val Analyst uses the IAS tools to

evaluate these qualities, and to test any calibration parameter updates before they are baselined. Once algorithms and code are tested and ready for production use, they are assigned to a software release. The algorithms and code are copied to a test environment that mimics the production environment and are retested before being formally released.

4.2.9 Data Quality Analyst (DQA)

The Data Quality Analyst (DQA) is a Point of Contact (POC) internal to the DPAS who interacts with ICs for Data Validation & Exchange (DV&E) Operations. The DQA performs the validation process and communicates results with the ICs. In addition, the DQA facilitates the exchange of Mission Data with ICs.

4.2.10 International Cooperators (IC)

ICs receive data downlinks from the observatory and may submit data collection requests through the UP. ICs routinely provide metadata to the DPAS and participate in periodic data validation activities. ICs also exchange Mission Data with the USGS, upon request by either party.

4.2.11 Mission Management Office (MMO)

The MMO is the USGS entity responsible for the day-to-day operations of the DPAS. The MMO interfaces with the FOT as part of the overall Landsat operations. The MMO is responsible for overall data management, DPAS Operations, and data collection reconciliation. The MMO is the primary user of the MDS, which gathers collection and other pertinent metrics from the DPAS for standard and ad-hoc reporting in support of mission management.

4.2.12 Configuration Management (CM)

Configuration Management (CM) personnel are responsible for the day-to-day CM activities of the Landsat operations. CM controls changes of software and hardware, performs official software and document releases, and tracks artifact changes. CM staff interfaces with several operations personnel including Operators, Data Management, Systems Engineers, Software Engineers, Hardware Engineers, Database Administrators, and the Mission Management Office Information Officer (MMOIO).

Section 5 Scenarios

5.1 Scenario Conventions

Figure 5-1 illustrates conventions used in the scenario diagrams of this section. Various line colors, styles, and weights distinguish the data and communication flows between the DPAS Subsystems and external entities, as shown in the scenario key. Arrow directions indicate data flow, and grey boxes designate Enterprise components and the use of callouts. Sequence blocks indicate the order of events within a scenario.

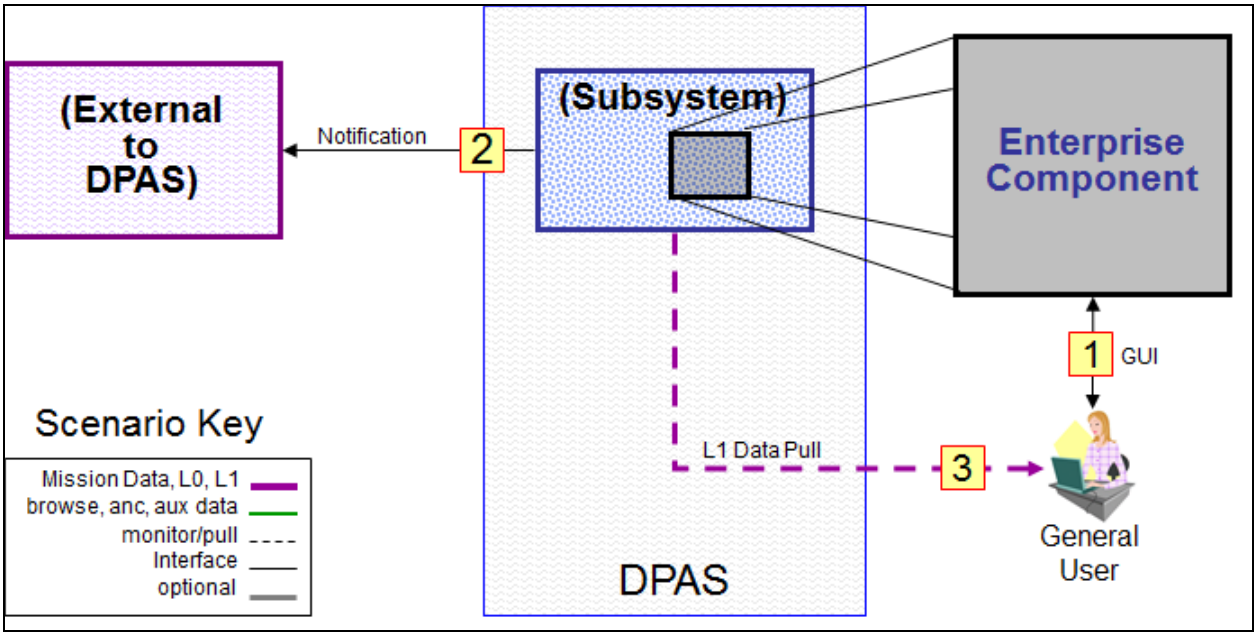

Figure 5-1. DPAS Scenario Conventions

5.2 Standard Processing

The fundamental responsibilities of the DPAS are data processing, storage, long-term archiving, and data and product distribution for the LDCM. Central to these responsibilities is the concept of standard processing. Standard processing consists of three key activities: Ingest Mission Data, Standard Product Generation, and Browse Generation. Figure 5-2 depicts the high-level flows that form these three activities. Each of these activities is shown in detail in the subsequent sections.

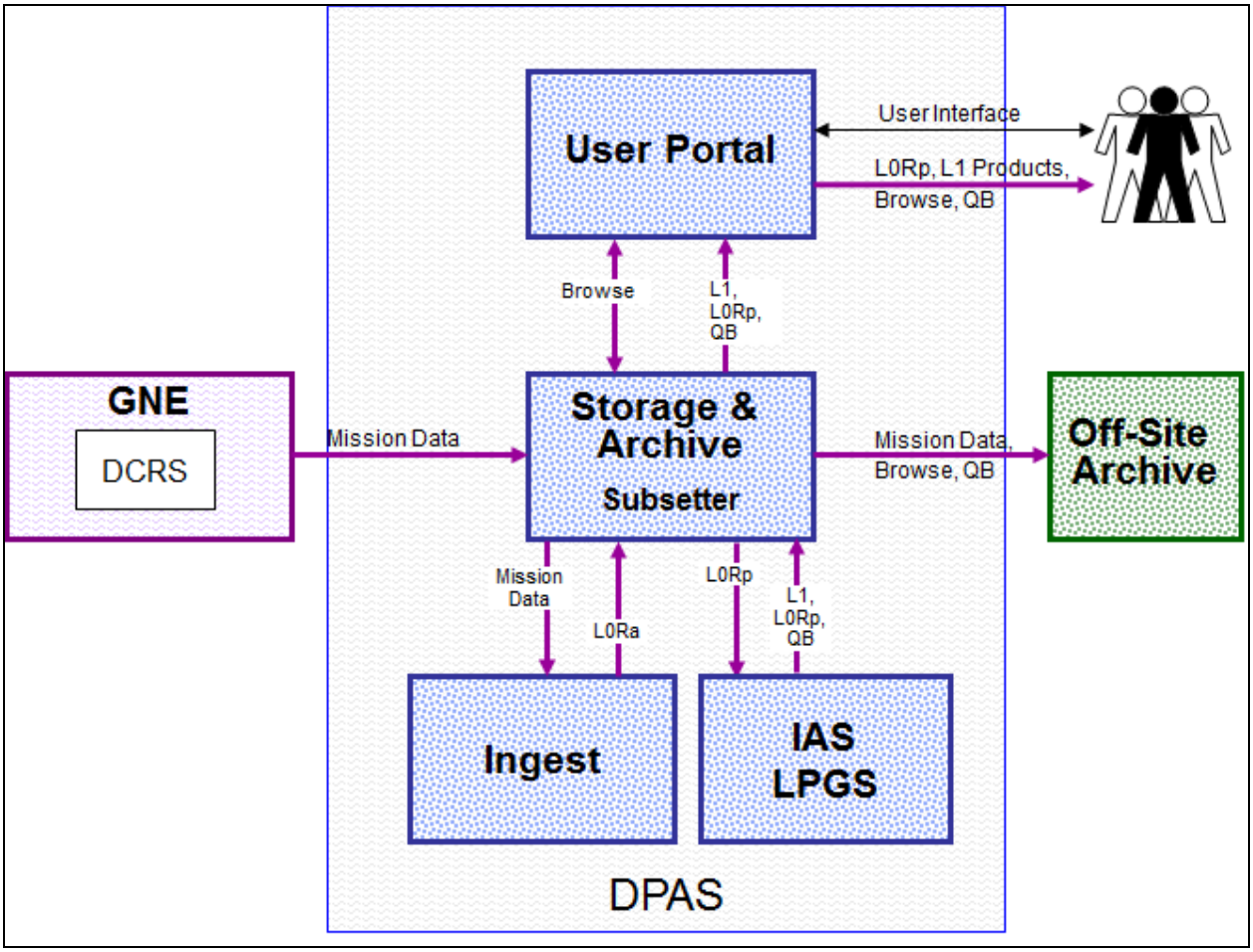

Figure 5-2. Standard Processing Data Flows

5.2.1 Ingest Mission Data

A fundamental responsibility of the DPAS is to format collected Mission Data into L0Ra data. Along with this formatting, the data are analyzed for impulse noise and saturated pixels, dropped lines are filled, duplicate lines are eliminated, ancillary data with suspicious timestamps are flagged, metadata is generated, and processing metrics are collected (see Figure 5-3).

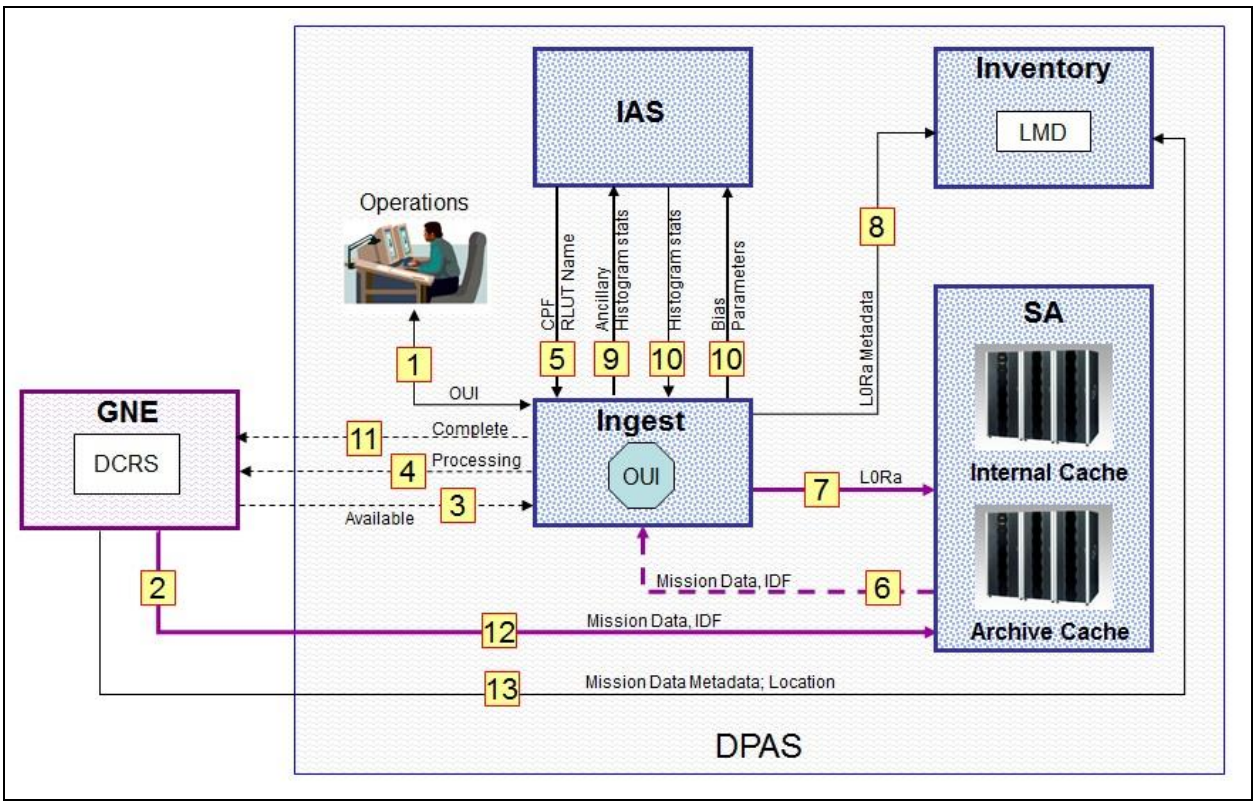

Figure 5-3. Ingest Mission Data

Step	Description of Figure 5-3
1	At any time, Operations may monitor Ingest Subsystem processing using the OUI. When processing anomalies are detected, Operations consults their procedures to resolve them (see subsection 5.10.1).
2	When all files related to an interval (sensor on to sensor off) are received, as defined in the Scene to Interval File Mapping Table (SIFMT), DCRS groups the files into a Mission Data interval directory, creates an IDF, and places the data and the IDF in a temporary work area on the Archive Cache.
3	The DCRS updates the STATUS field in the Subsystem Interface table of the DCRS database, indicating that an interval of Mission Data is available for processing. The Ingest Subsystem monitors the STATUS field.
4	The Ingest Subsystem updates the STATUS field in the Subsystem Interface table of the DCRS database, indicating the Mission Data is being processed.
5	The Ingest Subsystem retrieves the appropriate CPF and RLUT name from the IAS and pulls the CPF and RLUT files from the specified locations.
6	The Ingest Subsystem reads the Mission Data and IDF from the temporary work area of the Archive Cache.
7	The Ingest Subsystem writes the L0Ra data to the Internal Cache.

Step	Description of Figure 5-3
8	The Ingest Subsystem writes the interval metadata, scene metadata, and location of the L0Ra data to the LMD. Off-nadir collects are flagged as part of the L0Ra metadata.
9	The Ingest Subsystem stores the ancillary data in the IAS database. For collections of OLI Shutter, TIRS Deep Space and TIRS Blackbody data, Ingest stores histogram statistics in the IAS database.
10	**OLI Shutter, TIRS Deep Space collects**: - The Ingest Subsystem reads histogram statistics from new and previous collects from the IAS characterization database. - The Ingest Subsystem calculates new bias parameters and places them in the IAS database. Note: Actual BPF files are created when bias parameters are extracted from the IAS database (for use by LPGS, IAS, or ICs).
11	After successful completion of Mission Data processing, the Ingest Subsystem updates the STATUS field in the Subsystem Interface table of the DCRS database to indicate that the Mission Data is ready for archive. The DCRS monitors the STATUS field.
12	The DCRS moves the Mission Data from the temporary work area to the permanent area of the Archive Cache.
13	The DCRS updates the LMD with the Mission Data metadata and file location information.

5.2.2 Standard Product Generation

The DPAS generates standard products for distribution to the user community (see Figure 5-4). These standard products consist of L0Rp and L1 products as defined in their respective Data Format Control Book (DFCB). The L0Rp data is produced as part of the production flow for the L1 product and automatically provided along with each L1 product. At a minimum, the DPAS must produce 400 L0Rp and L1 products per day.

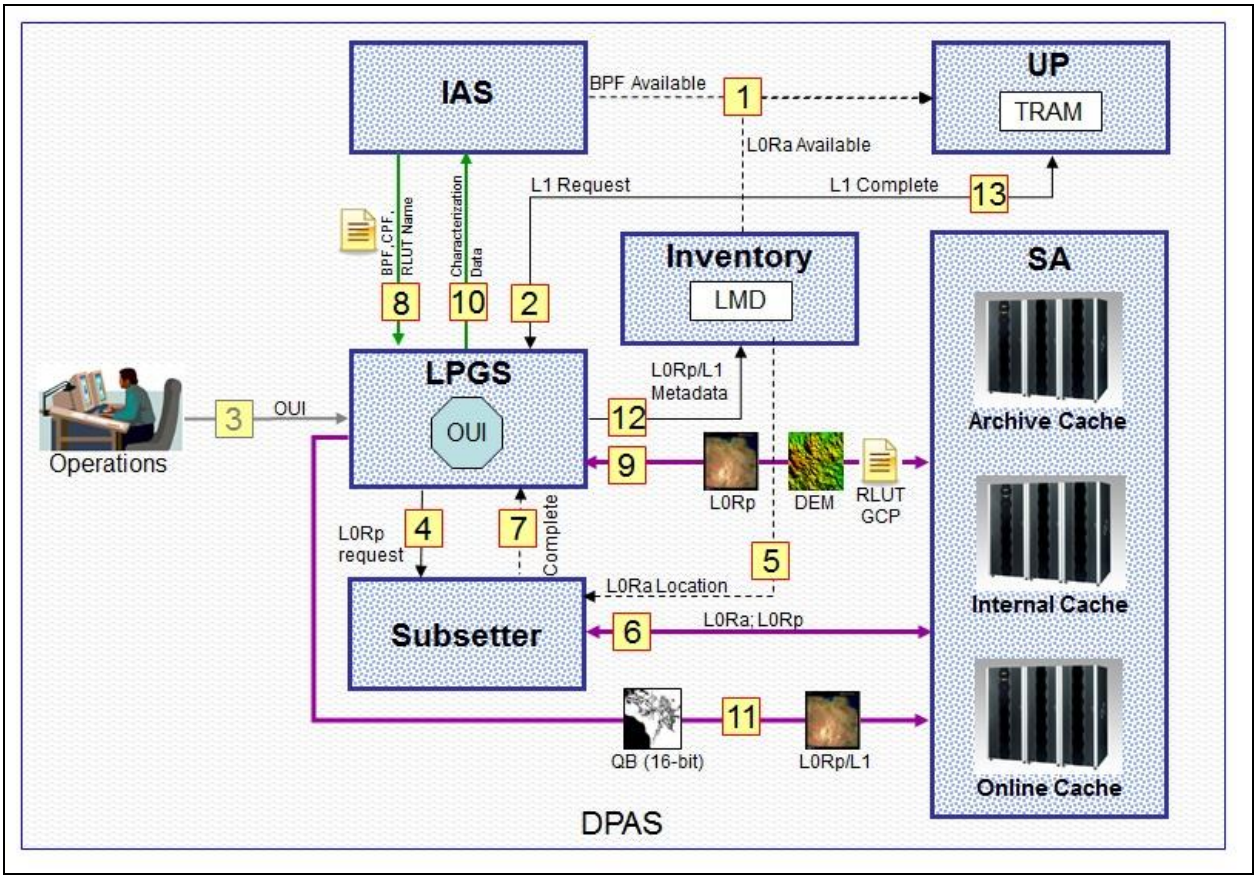

Figure 5-4. Standard Product Generation

Step	Description of Figure 5-4
1	The UP monitors the LMD for new scene availability, and monitors the IAS database for the availability of bias parameters. UP also monitors the bias parameter wait time. When bias parameters become available for new scenes in the LMD, or when the maximum bias parameter wait time has been exceeded, UP submits L1 product orders for the new scenes (Step #2).
2	The UP submits an L1 product request (via the TRAM) for each new scene in the LMD with matching bias parameters or that have exceeded the timeout period. The L1 request results in both an L1 and L0Rp product being generated.
3	**OPTIONAL**: At any time, Operations may manually reprioritize product generation requests in the LPGS processing queue through the LPGS OUI. This capability allows Operations to control the production queue and accommodate priority processing requests.
4	The LPGS invokes the Subsetter Subsystem to extract a scene (L0Rp) from the specified L0Ra.

Step	Description of Figure 5-4
5	The Subsetter Subsystem pulls scene extent information and L0Ra file location from the LMD.
6	The Subsetter Subsystem reads the L0Ra data from the Internal Cache and writes the L0Rp data to the Internal Cache.
7	The LPGS monitors the Subsetter Subsystem database to determine subset completion and L0Rp data location.
8	The LPGS gets the required BPF and CPF from the IAS; the LPGS acquires the RLUT names from the IAS.
9	The LPGS calculates the DEM required for the L1 product and reads the DEM, RLUT, and L0Rp data from the Internal Cache. The LPGS reads the GCP data from the Archive Cache. The LPGS writes intermediate processing files to the Internal Cache (Processing Cache).
10	During processing of the standard product, select characterization data are collected and provided to the IAS. Off-nadir characterization data are flagged for identification.
11	As part of the standard product processing, the LPGS creates a 16-bit QB for the L1 product. A terrain occlusion mask is generated and included in the QB to indicate where imagery is occluded due to terrain effects. The 16-bit QB is written to the Online Cache for inclusion within the L1 product (as compared to the 8-bit QB that is distributed with the FRB; see subsection 5.2.3). The LPGS bundles the appropriate files for each product into a zipped tar file, places the L1 and L0Rp products on the Online Cache for distribution, and deletes intermediate processing files from the Internal Cache (Processing Cache).
12	The LPGS updates the LMD with L0Rp and L1 product metadata. Off-nadir products are flagged as part of the L0Rp and L1 metadata.
13	The LPGS notifies the UP (TRAM) that the standard product processing was completed. (UP generates browse files for the L1 product; see subsection 5.2.3.)

5.2.3 Browse Generation and Quality Band

The DPAS produces two types of browse images, FRB and RRB; both are created from the L1 product. The browse images assist with quick assessment of image coverage, cloud distribution, and quality. A 16-bit QB is also created for the L1 product, and an 8-bit QB is derived from it. The FRB and 8-bit QB images are provided to LandsatLook, and are archived. The RRB images are provided to EE. The 16-bit QB is provided to the customer as part of the L1 product.

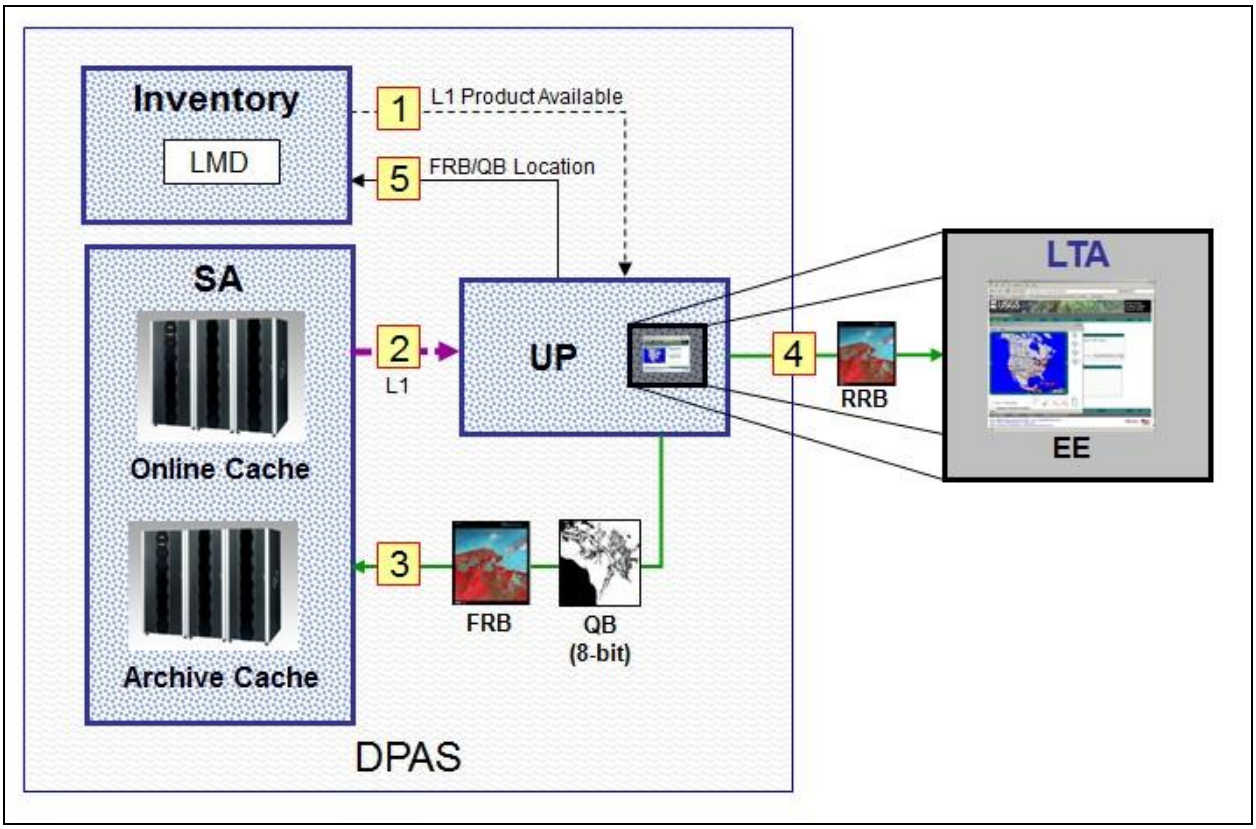

Figure 5-5. Browse Generation and Quality Band

Step	Description of Figure 5-5
1	The UP is notified when a new L1 product is available (storage location entered into the Inventory).
2	The UP reads the L1 product from the Online Cache and generates FRB, 8-bit QB, and RRB.
3	The UP places the FRB and 8-bit QB on the Online Cache and the Archive Cache.
4	The UP delivers the RRB to EE.
5	The UP updates the Inventory with the location of the FRB and 8-bit QB in the Online Cache. At this point, the L1 product is now available for distribution.

5.3 On-Demand Processing

The Online Cache within the DPAS is a rolling cache. That is, products are kept in the cache to download for a required length of time, and then are “rolled off” to make space for new products. This concept is based on historical Landsat product access trends. When a product is removed from the Online Cache, its associated browse remains in the Online Cache and metadata information remains in the SID. If a user requests a product that has been rolled off (not available for immediate delivery), the product is re-created and placed in the Online Cache. This mechanism applies to both L0Rp and L1 products.

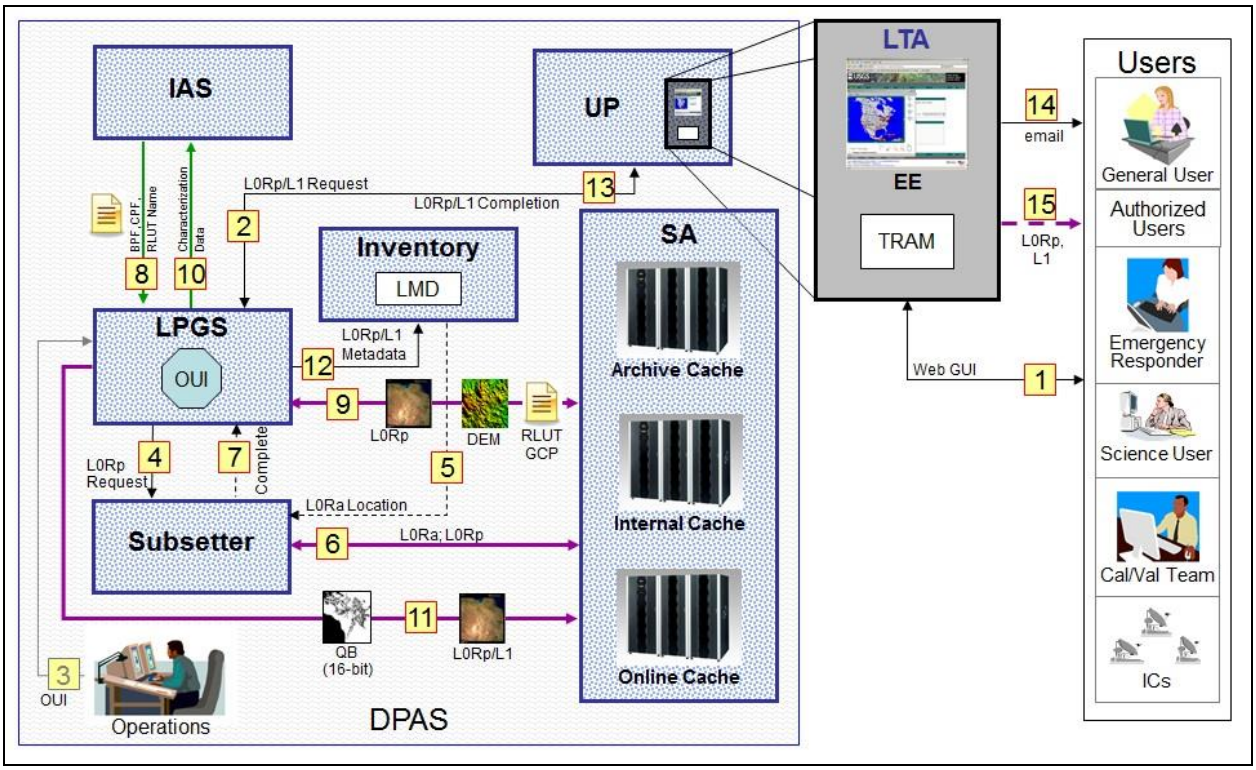

Figure 5-6. On-Demand Processing

Step	Description of Figure 5-6
1	The user selects a product through EE. If the selected standard product (L0Rp or L1) is not available for immediate delivery from the Online Cache, an on-demand order is created. The EE submits the user’s product request to the TRAM component of the UP.
2	The UP, via TRAM, submits a product request to the LPGS.
3	**OPTIONAL**: Before processing has started, Operations may manually reprioritize product requests in the LPGS processing queue through the LPGS OUI. This capability allows Operations to control the production queue and facilitate priority changes when needed.
4	The LPGS invokes the Subsetter Subsystem to extract a scene (L0Rp) from the specified L0Ra.
5	The Subsetter Subsystem pulls scene extent information and L0Ra file location from the LMD.
6	The Subsetter Subsystem reads the L0Ra data from the Internal Cache and writes the L0Rp data to the Internal Cache.
7	The LPGS monitors the Subsetter Subsystem database to determine subset completion and

Step	Description of Figure 5-6
	L0Rp data location. For L0Rp on-demand products, the LPGS skips to step #11.
8	The LPGS gets the required BPF and CPF from the IAS; the LPGS acquires the RLUT names from the IAS.
9	The LPGS calculates the DEM required for the L1 product and reads the DEM, RLUT, and L0Rp data from the Internal Cache. The LPGS reads the GCP data from the Archive Cache. The LPGS writes intermediate processing files to the Internal Cache (Processing Cache).
10	During processing of the standard product, select characterization data are collected and provided to the IAS. Off-nadir characterization data are flagged for identification.
11	For L1 products, the LPGS creates a 16-bit QB. A terrain occlusion mask is generated and included in the QB to indicate where imagery is occluded due to terrain effects. The 16-bit QB is written to the Online Cache for inclusion within the L1 product (as compared to the 8-bit QB that is distributed with the FRB; see subsection 5.2.3). The LPGS bundles the appropriate files for each product into a zipped tar file, places the product file (L0Rp, L1, or both) on the Online Cache for distribution, and deletes intermediate processing files from the Internal Cache (Processing Cache).
12	The LPGS updates the LMD with product metadata. Off-nadir products are flagged as part of the L0Rp and L1 metadata.
13	The LPGS notifies the UP (TRAM) that the requested product processing was completed. (If a L1 product was requested, UP generates browse files; see subsection 5.2.3.)
14	The UP sends an e-mail to the user with the location of the L0Rp or L1 products for the user to download.
15	The user downloads the recreated product.

5.4 Mission Data Reprocessing

Although not expected, if a problem is found with the L0Ra data, it may be necessary to reprocess the Mission Data and create new L0Ra data to correct the problem. In this case, Mission Data are staged to the Archive Cache, and (re)ingested to produce a new version of the L0Ra data. Removal of the old L0Ra data and associated metadata are at the discretion of the Data Manager (DM) (see Figure 5-7).

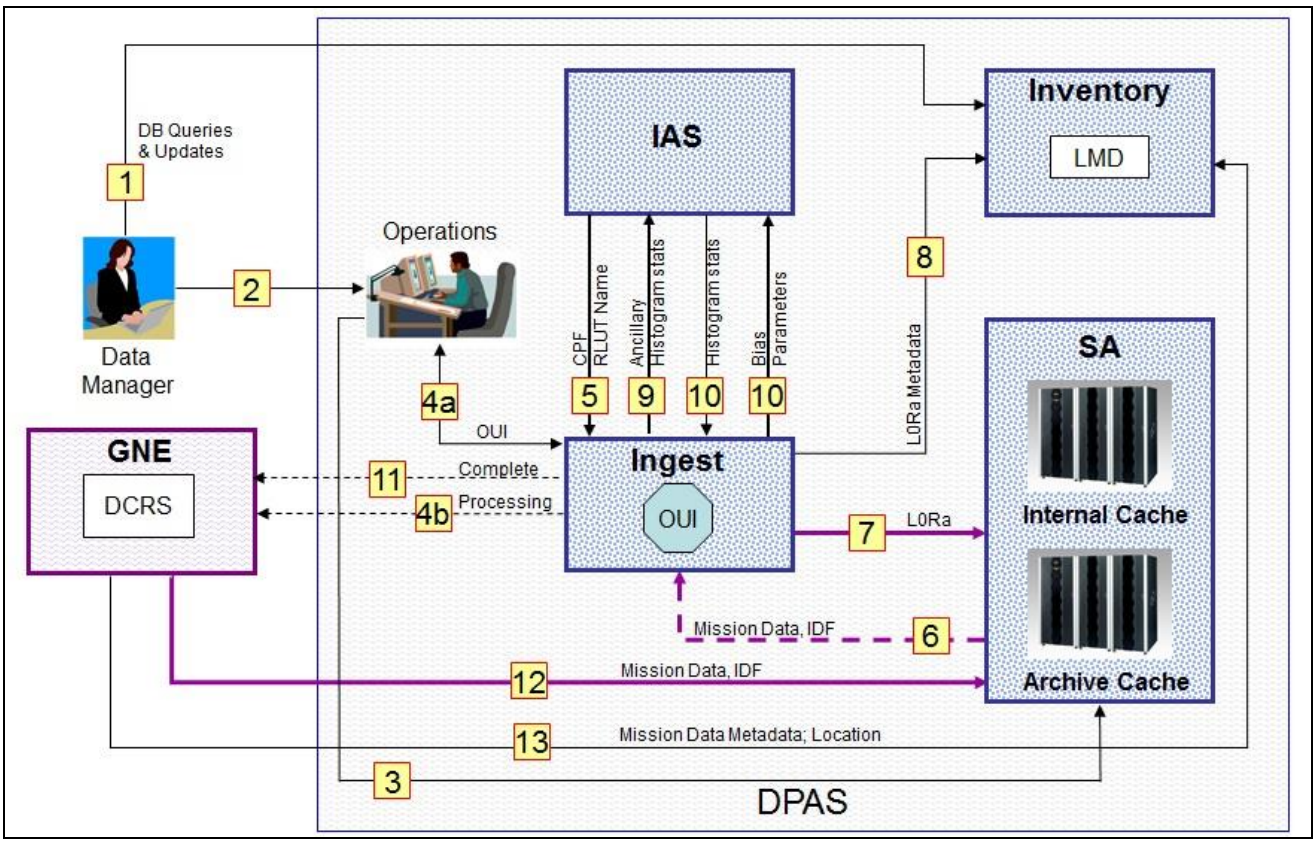

Figure 5-7. Mission Data Reprocessing

Step	Description of Figure 5-7
	Note: Except for steps 1-4a, Mission Data Reprocessing is the same as Ingest Mission Data.
1	A problem is identified with an L0Ra interval. The DM interacts with the LMD and sets the problem L0Ra as not available, and all scenes produced from this interval are marked unorderable. If Subsetter requests L0Ra data that is not available, it returns a status indicating that the L0Ra data is not available (as set in the LMD).
2	The DM interacts with Operations to reprocess the L0Ra data. This communication includes a preferred reprocessing order (if any).
3	Operations submits a request to the SA to stage the Mission Data to the Archive Cache. (The staging ensures efficient use of archive media, tape drives, and robotics.)
4	a) Operations searches the Ingest OUI for a job containing the Interval ID and manually submits a reprocessing request for the Interval. b) Ingest sets the reprocessing flag in the Subsystem Interface table.

Step	Description of Figure 5-7
5	The Ingest Subsystem retrieves the appropriate CPF and RLUT name from the IAS and pulls the CPF and RLUT files from the specified locations.
6	The Ingest Subsystem reads the Mission Data and IDF from the temporary work area of the Archive Cache.
7	The Ingest Subsystem writes the L0Ra data to the Internal Cache.
8	The Ingest Subsystem writes the interval, scene metadata, and location of the L0Ra data to the LMD. Off-nadir collects are flagged as part of the L0Ra metadata.
9	The Ingest Subsystem stores the ancillary data in the IAS database. For collections of OLI Shutter, TIRS Deep Space and TIRS Blackbody data, Ingest stores histogram statistics in the IAS database.
10	**OLI Shutter, TIRS Deep Space collects**: c) The Ingest Subsystem reads histogram statistics from new and previous collects from the IAS characterization database. d) The Ingest Subsystem calculates new bias parameters and places them in the IAS database. Note: Actual BPF files are created when bias parameters are extracted from the IAS database (for use by LPGS, IAS or ICs).
11	After successful completion of Mission Data processing, the Ingest Subsystem updates the STATUS field in the Subsystem Interface table of the DCRS database to indicate that the Mission Data is ready for archive. The DCRS monitors the STATUS field.
12	The DCRS moves the Mission Data from the temporary work area to the permanent area of the Archive Cache.
13	The DCRS updates the LMD with the Mission Data metadata and file location information.

5.5 Data Management

5.5.1 Archive Management

The DPAS is required to archive all mission critical data. This includes Mission Data, BAD, browse data, 8-bit QB, prelaunch data, and milestone backups (algorithms, software applications, database, and documentation). Proper archive management ensures the long-term preservation of data and protection of sensitive information. For the DPAS, archive management is performed by an enterprise capability provided by the LTA Project, the EROS Computer Room 1 Mass Storage System (CR1MSS). The CR1MSS is a multi-level data archive with an HSM, depicted in Figure 5-8. LDCM use of the CR1MSS is described in DPAS Storage and Archive Subsystem documents.

The DPAS Archive Cache is the primary point of interface to the CR1MSS Operational Archive. The Backup Archive consists of offline media, stored in the EROS basement, for use in the event of a media failure in the Operational Archive. The Offsite Archive consists of offline media stored at the NARA Facility in Lee's Summit, Missouri. The Offsite Archive is primarily intended for disaster recovery but may also be used to retrieve data if the other sources of data are not readable.

This section concentrates on the Backup Archive and Offsite Archive, and on milestone backups. Operational delivery of files to the DPAS Archive Cache is covered in other scenarios. The Ingest Mission Data scenario shows the delivery of the Mission Data, BAD, and IDF to the Archive Cache. The Browse Generation scenario shows the delivery of the FRB and the 8-bit QB data to the Archive Cache.

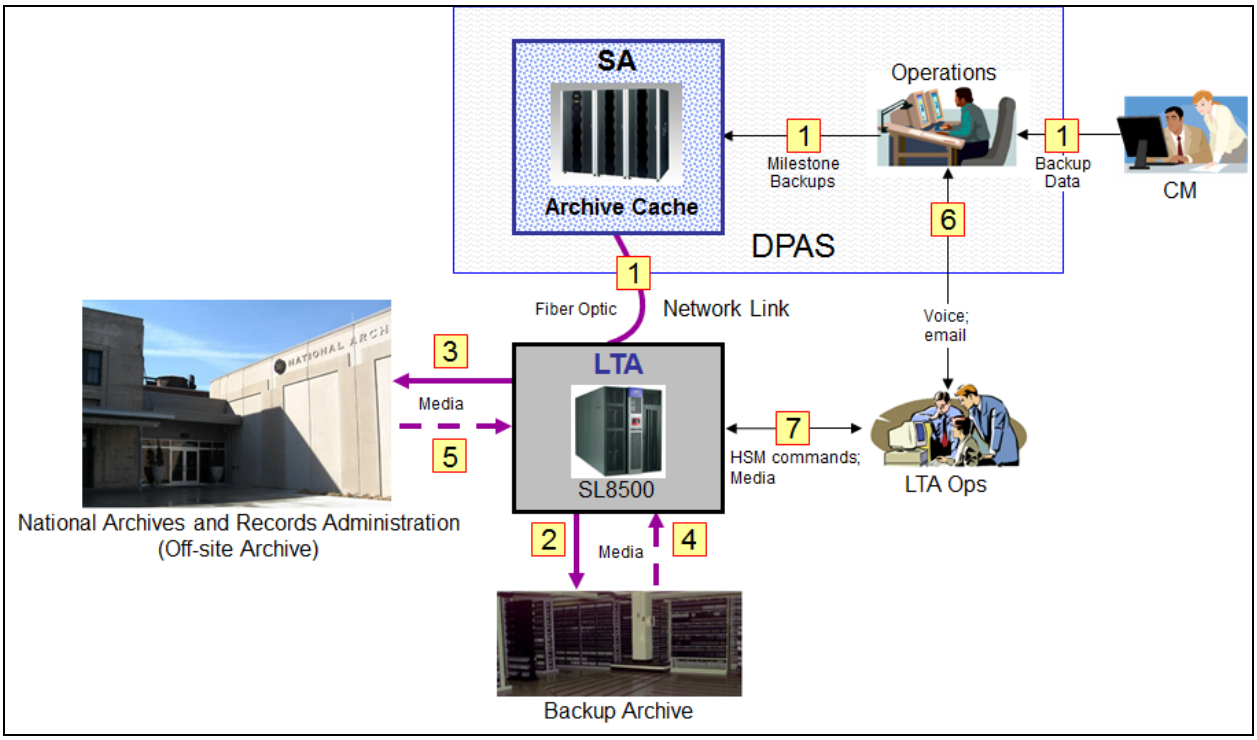

Figure 5-8. Archive Management

Step	Description of Figure 5-8
1	CM provides project milestone backup materials (documentation, algorithms, database, software applications) to Operations for delivery to the Archive Cache. The HSM copies the data from the Archive Cache to nearline media via the fiber optic network link.
2	Media are sent to the (onsite) Backup Archive.
3	Media are sent to the Offsite Archive (NARA facility).
4	In the event of a media failure, media is retrieved from the (onsite) Backup Archive.
5	In the event that both the nearline and backup copies of the data are unreadable, media is retrieved from the Offsite Archive (NARA facility).
6	Operations and LTA Operations coordinate archive management activities. The DPAS may report anomalies / errors as a result of data retrieved from the Operational Archive. The LTA works with support personnel to determine problems with media, drives, hardware, etc. This may initiate retrieval of data from the Backup or Offsite Archives.
7	LTA Operations interacts with the LTA Archive (SL8500) to perform automated media migration, as needed. This includes both media replacement, as well as media upgrade activities.

5.5.2 Storage Management

The DPAS monitors storage resources and performs storage management as needed. Routine storage management includes rules-based removal of standard products from the Online Cache. Operations may initiate storage management activities if needed (see Figure 5-9).

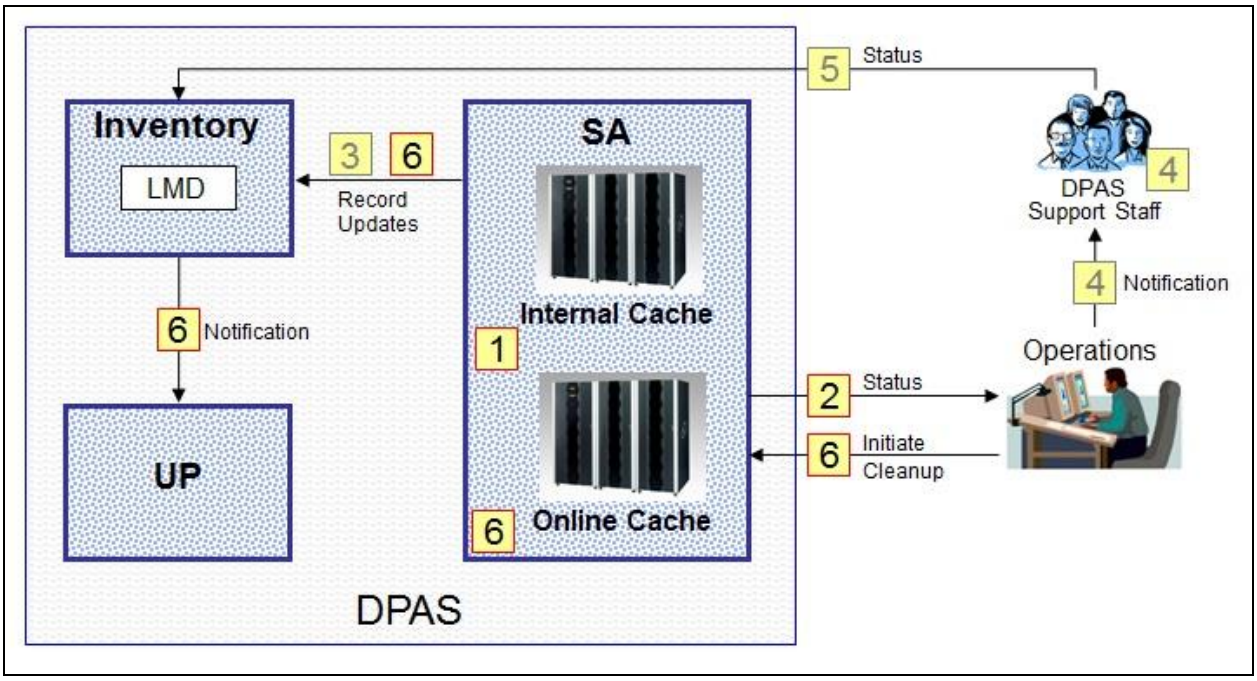

Figure 5-9. Storage Management

Step	Description of Figure 5-9
	Data Integrity Checks / Recovery
1	The SA runs a background process to perform data integrity checks (checksum comparisons).
2	The SA displays the status on the SA Graphical User Interface (GUI). (If an error is found, the status is ALERT.)
	If checksum errors are found, perform steps 3 – 5.
3	The SA updates the file's checksum status in the Inventory to "X".
4	The Operator notifies DPAS support staff of checksum errors. DPAS support staff investigate and resolve the problem. This may require regeneration or retrieval from the Archive. If the issue is with a product file, the product may be removed and regenerated on-demand, if needed.
5	When the problem is resolved, DPAS support staff update the Inventory as appropriate. (For a recovered file, set the file's checksum status to "G".)
	Online Cache Cleanup
6	The SA or the Operator initiates a rules-based cleanup for the Online Cache on a periodic basis or as needed. SA identifies the standard products meeting the removal criteria and updates the associated records in the Inventory to indicate product removal; the Inventory Subsystem notifies UP of product removal; SA removes the products from the Online Cache. (The criteria for product removal are configurable and may include product creation data, last access date, and cloud cover score.)

5.5.3 Data Manager Interaction

The DM interacts with the DPAS to perform reporting, data management, and data policy functions for the MMO. The DM helps to resolve data and metadata problems that may be detected or reported, and may manually update metadata and request reprocessing and/or removal of problem products (see Figure 5-10). Should cleanup of the permanent Mission and BAD data be required, the DM acquires assistance of a system user with the necessary permissions for modification or deletion of the data.

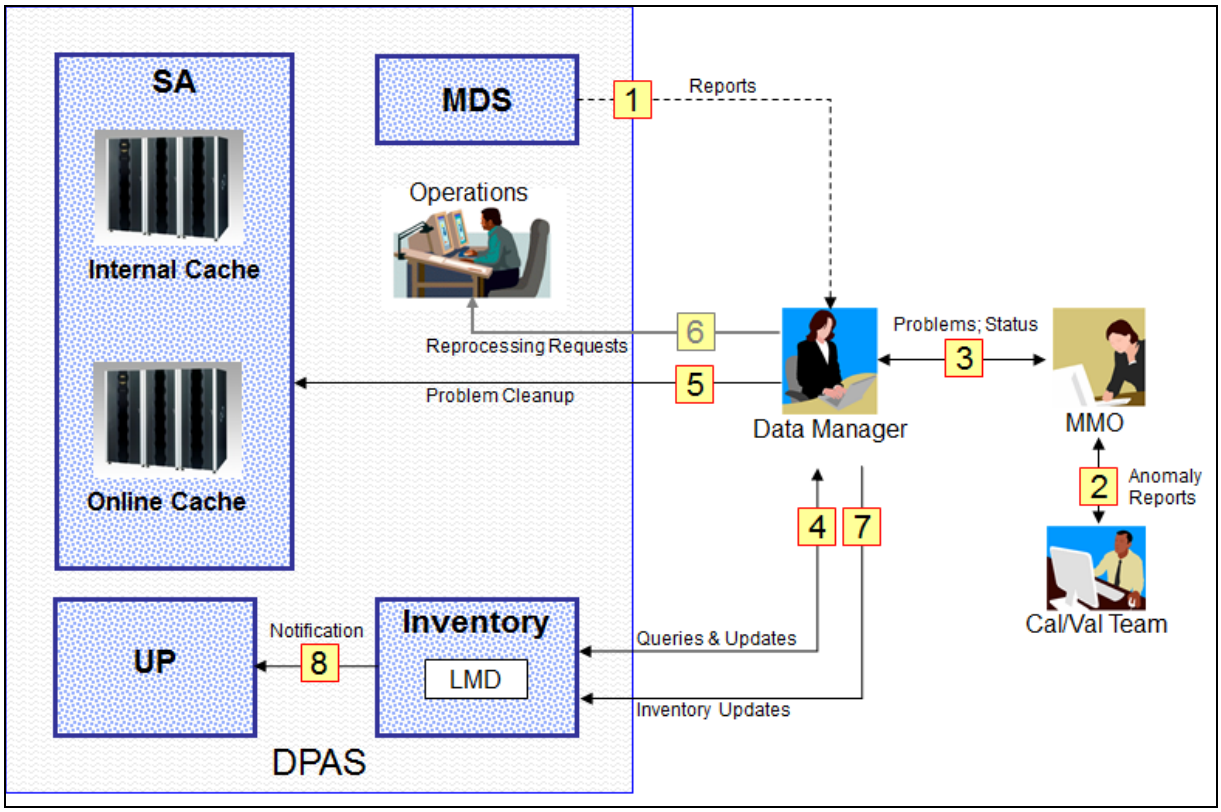

Figure 5-10. Data Manager Interaction

Step	Description of Figure 5-10
1	The DM uses the MDS for standard and ad-hoc reporting.
2	CVT investigates product anomalies and reports its findings to the MMO.
3	The DM interacts with the MMO on product problem resolution, as well as reporting and data management status.
4	The DM sets / resets orderable record fields in the LMD and ensures the integrity of the database records.
5	If a problem is detected in a standard product, 8-bit QB, or FRB, the DM initiates a special parameter-based cleanup to remove the problem product or data from the Online Cache. (Problem products and/or data are recreated on-demand as needed (see subsection 5.3)).
6	**OPTIONAL**: In the event that a problem is detected with L0Ra data, the DM updates the LMD and coordinates reprocessing with Operations (see subsection 5.4).
7	The DM updates the Inventory as needed. Updates might include marking data as ENGINEERING data.
8	The Inventory Subsystem notifies the UP of product changes.

5.6 Reporting (MDS)

5.6.1 Metrics Reporting

A key tool for the MMO, the MDS collects metrics from selected Subsystems of the DPAS and GNE, in order to generate standard and ad-hoc queries and reports in support of the mission. In this manner, the MDS acts as a data warehouse for the DPAS (Figure 5-11).

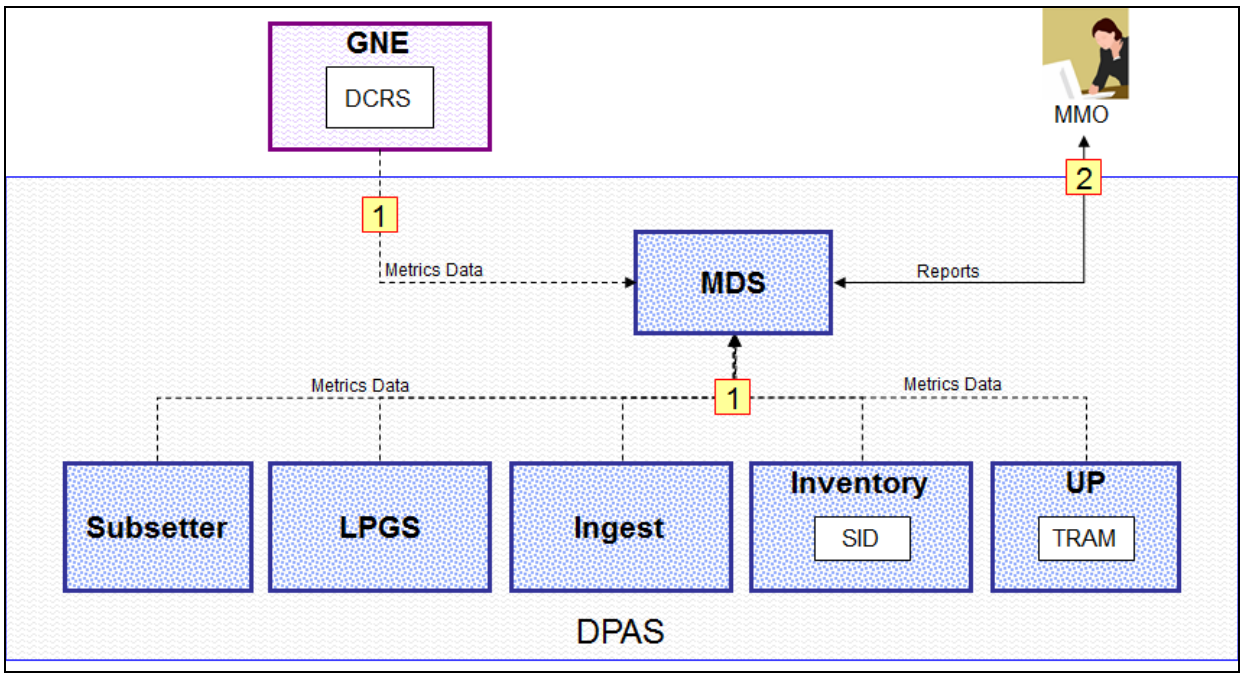

Figure 5-11. Metrics Reporting

Step	Description of Figure 5-11
1	The MDS pulls metrics from the databases of the DPAS Subsystems, and GNE. This data pull occurs at least daily and is configurable.
2	The MMO interacts with the MDS to execute standard reports and perform ad-hoc queries.

5.6.2 Collection Reconciliation

The DM performs collection reconciliation to ensure that the holdings within the DPAS and those at an IC are consistent with scheduled collections and actual collections (Figure 5-12).

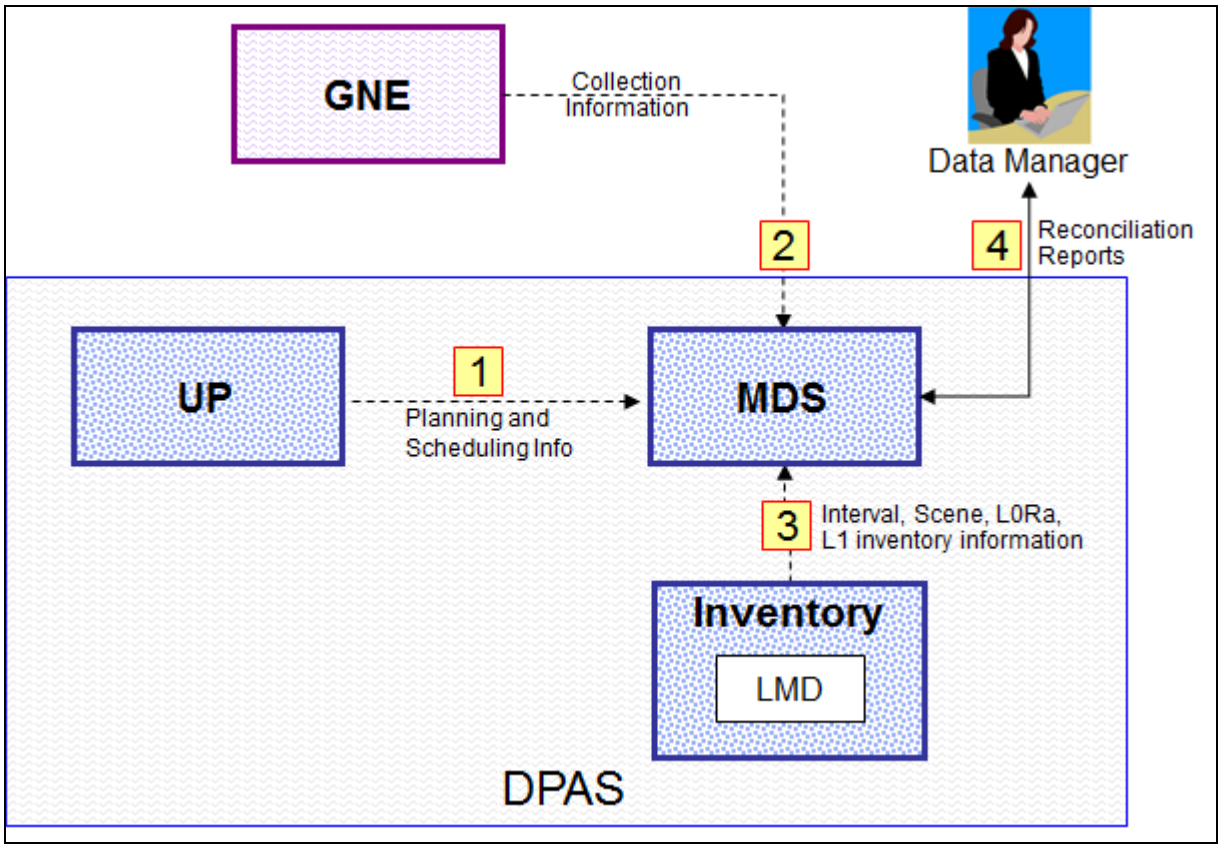

Figure 5-12. Collection Reconciliation

Step	Description of Figure 5-12
1	The MDS pulls planning and scheduling information from the UP.
2	The MDS pulls Mission Data collection information (actual) from the DCRS of the GNE.
3	The MDS pulls interval, scene, L0Ra, and L1 inventory information from the Inventory Subsystem.
4	The DM interacts with the MDS to receive collection reconciliation reports.

5.7 User Portal

5.7.1 Registration

The registration process provides a secure mechanism for a user to provide registration information. It also supports the assignment of user roles and permissions (some users have higher levels of authorization than others). Registration also allows for demographic information to be gathered about product distribution and system usage (Figure 5-13). Each time a registered user logs in, their identity is authenticated.

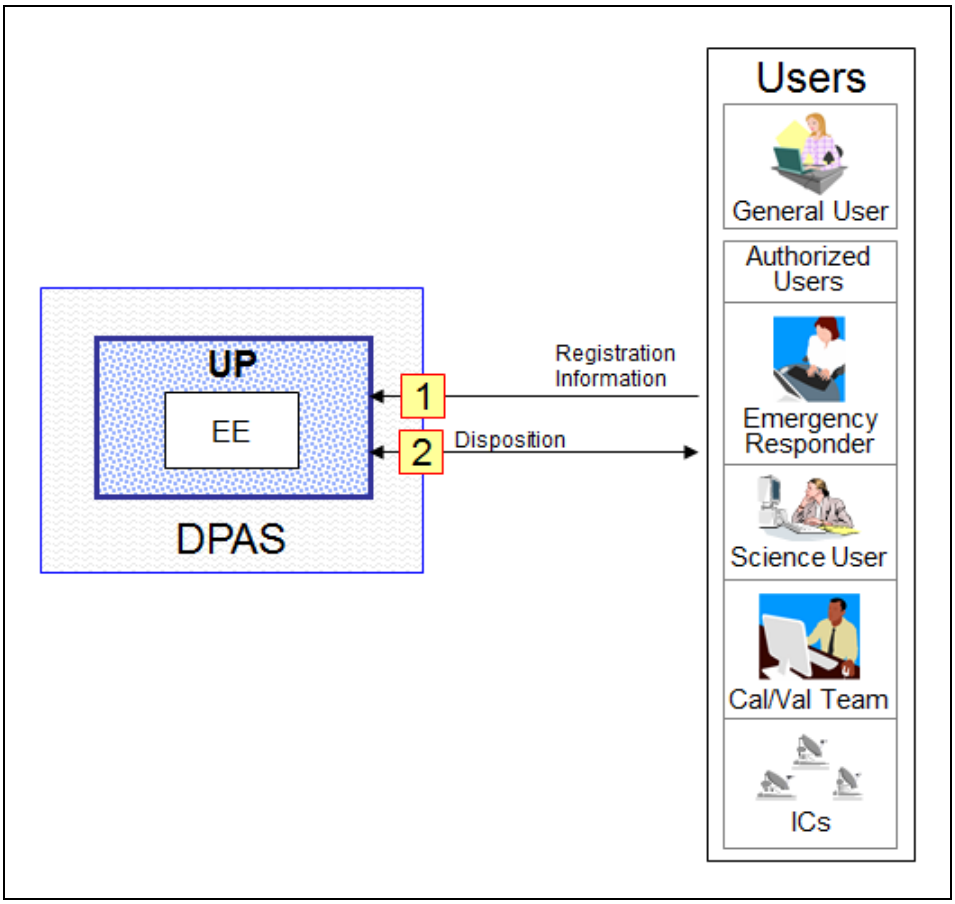

Figure 5-13. Registration

Step	Description of Figure 5-13
1	Users interact with EE to provide registration information.
2	EE dispositions registration requests (either success or failure).

5.7.2 Search & Order

A fundamental capability of the DPAS, search and order represents the capability for a user to search the holdings of the LMD, using product metadata and browse imagery to find and select desired data for download (see Figure 5-14). Two mechanisms within the UP support this activity: the EE application, and the support for Standards Based Clients (e.g., OGC, Keyhole Markup Language (KML)).

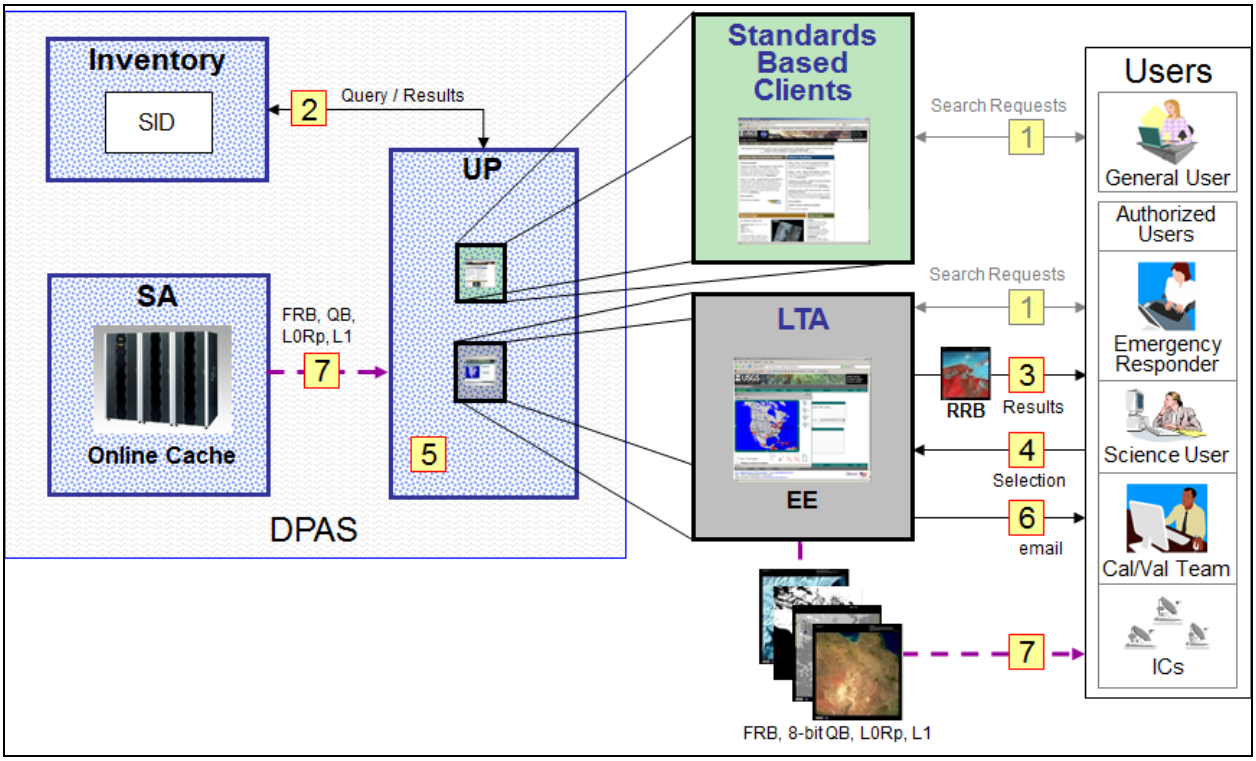

Figure 5-14. Search & Order

Step	Description of Figure 5-14
1	A user submits a search request (text, spatial, graphic extent, temporal).
2	The UP translates the interactive selection criteria into a query to the SID, based on search parameters and user access rights.
3	The UP marshals the results and returns them to the user, including the RRB. Off-nadir scenes are indicated in the results.
4	The user selects FRB, 8-bit QB, L0Rp, or L1 products using the query results. **Note:** A user must be registered and logged in to download FRB, 8-bit QB, L0Rp, or L1 products (see subsection 5.7.1).
5	If L0Rp or L1 are not available, an on-demand order (see subsection 5.3) is made. **Note:** A user must be registered and logged in to submit on-demand orders.
6	For on-demand products, an e-mail is sent to the user with the location of the L0Rp or L1 products for the user to download.
7	For immediately available data or when on-demand products become available, the user downloads the FRB, 8-bit QB, L0Rp, or L1 products.

5.7.3 Information Dissemination

Information dissemination for the DPAS is focused on information that is desirable to users for their studies, new product development, or the current mission status. Information is disseminated based on USGS policy, with information available to users according to their specific authorization. For the DPAS, the UP is the exclusive interface for these user information requests (see Figure 5-15).

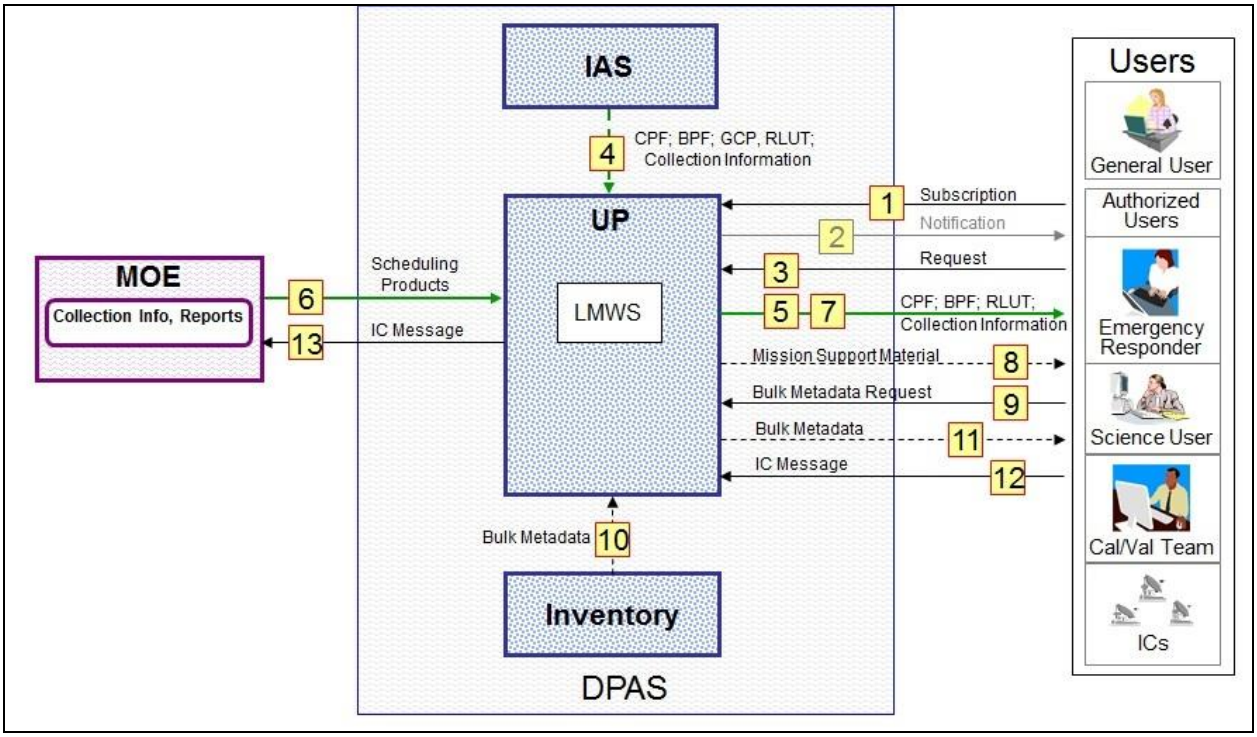

Figure 5-15. Information Dissemination

Step	Description of Figure 5-15
1	A registered and logged in user optionally subscribes for notifications for new mission information (new CPF, BPF, etc.).
2	Notification is sent to the user, based on subscription criteria.
3	A user requests CPF, BPF, RLUT, GCP, Mission Operations Element (MOE) collection information and reports, or Mission Support material (Cal/Val reports, DFCB, Instrument Status, other links, Algorithm Design Document (ADD), software, documentation, etc.).
4	The UP pulls the requested CPF / BPF / RLUT from the IAS.
5	The CPF / BPF / RLUT is provided to the user.
6	The MOE returns the MOE Scheduling Products and reports to the UP.
7	The UP provides MOE collection information and reports to the user.
8	Mission Support material is provided to the user through the Landsat Mission Web Site (LMWS).
9	The user requests a bulk metadata distribution.
10	The UP pulls the requested bulk metadata from the Inventory Subsystem.
11	The user receives the requested bulk metadata from the UP.
12	An IC submits communication messages (problem report, station description, administration message, Post Pass Reports, etc.) to the UP.
13	The UP forwards communication messages from the IC to the MOE.

5.7.4 Collection Request

Collection requests allow an authorized user to submit requests to the Collection Activity Planning Element (CAPE) (see Figure 5-16). The CAPE includes such requests in its scheduling activity and responds to status and cancellation requests by a user. For security reasons, the UP acts as a broker to the CAPE, and is the sole interface to users for the CAPE. Inclusion of requested collections in the schedule activity is up to the CAPE.

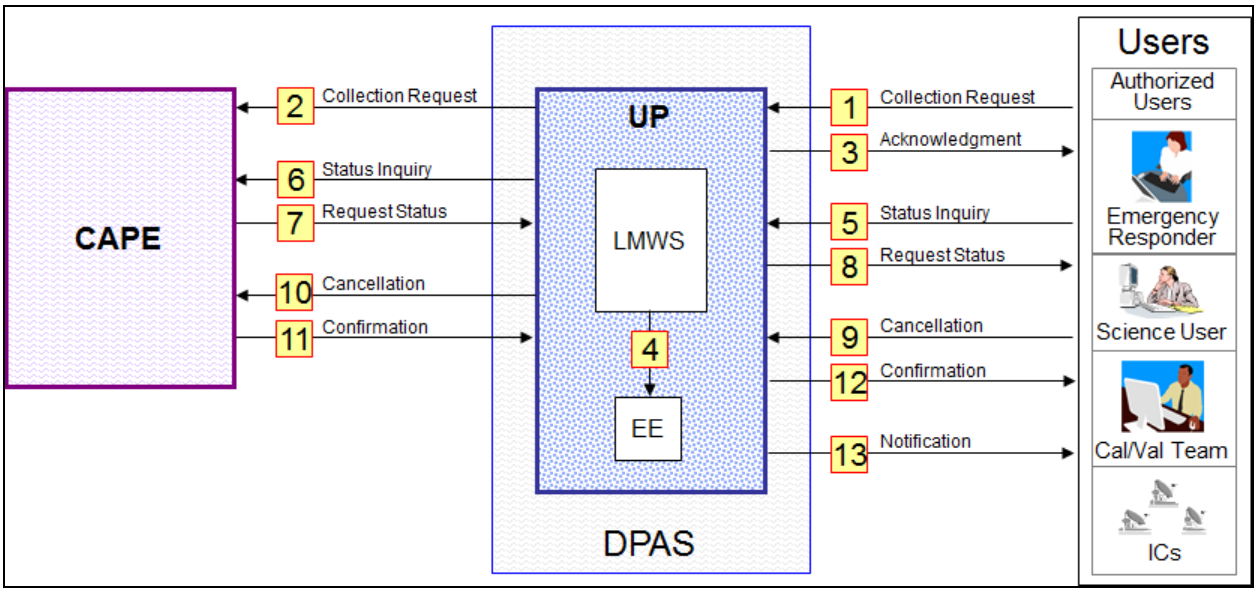

Figure 5-16. Collection Request

Step	Description of Figure 5-16
1	A registered and logged in user submits a collection request using Area of Interest (AOI) and other criteria, provided by the UP.
2	The user's collection request is sent to the CAPE.
3	The UP acknowledges the receipt of the user's collection request.
4	The UP submits a Standing Request on behalf of the user.
5	The user may request the status of the collection request.
6	The UP requests the status of the user's collection request from the CAPE.
7	The CAPE provides the collection request status results to the UP.
8	The collection request status is provided to the user. **NOTE**: The user can also obtain the Confirmed Contact Schedule from the UP.
9	The user may request the cancellation of a collection request.
10	The collection cancellation request is sent to the CAPE.
11	The CAPE then confirms the cancellation to the UP.
12	The UP provides the cancellation confirmation to the user.
13	The user is notified when the scene has been collected and is available.

5.8 Calibration Validation Operations

5.8.1 Calibration/Validation (Cal/Val) Processing

A key requirement of the DPAS is to support Cal/Val operations. The focus of this support for the DPAS is the IAS. The IAS provides image processing capabilities specific to the needs of Cal/Val operations, and is the primary tool of the CVT for product assessment (Figure 5-17).

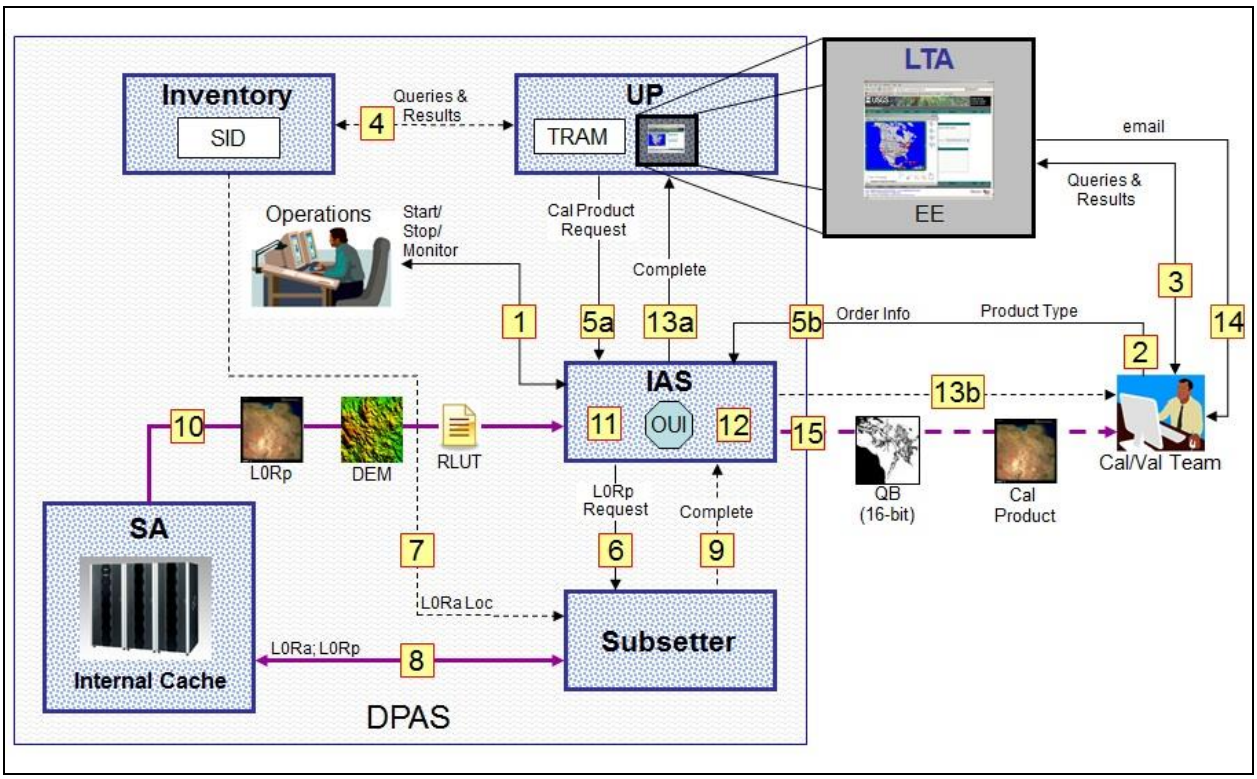

Figure 5-17. Cal/Val Processing

Step	Description of Figure 5-17
1	Operations staff starts, stops, and monitors the IAS for the CVT. Monitoring includes disk space thresholds and processing log errors. In the event of disk space shortage, Operations invokes a rules based clean up capability. For processing errors, Operations communicates such errors to the CVT.
2	The CVT creates a product type in the IAS. These product types are used for standing orders or standard Cal/Val processing, and contain static parameters.
3	The CVT interacts with the EE portion of the UP for data searching and ordering.
4	The UP queries the Cal/Val SID as needed.
5a	**For Predefined Product Type Requests**: The CVT submits a request for a calibration product based on the product type created in Step 1. The UP (TRAM) forwards this request to the IAS for processing. **NOTE**: This could also be a standing order.
5b	**For Interactive Requests**: The CVT interacts with the IAS OUI to submit a product request. Unlike standard processing, the OUI allows the CVT to change any parameter (including processing steps) in a product request.

Step	Description of Figure 5-17
6	The IAS invokes the Subsetter Subsystem to extract a scene (L0Rp) from the specified L0Ra. If an L0Ra is requested (i.e., interval data, lunar, solar, etc.), the Subsetter Subsystem returns the entire L0Ra.
7	For L0Rp requests, the Subsetter Subsystem pulls scene extent information from the LMD.
8	The Subsetter Subsystem reads the L0Ra data from the Internal Cache and writes the L0Rp data to the Internal Cache.
9	The IAS monitors the Subsetter Subsystem database for subset completion and L0Rp data location.
10	The IAS calculates the DEM required for the L1 product from the L0Rp Internal Cache and reads the DEM data, and the RLUT from the Internal Cache. The IAS writes intermediate processing files to the IAS local disk.
11	The IAS retrieves the required CPF, BPF, and GCP data using IAS services.
12	During processing, select characterization data are collected and stored in the IAS database. Off-nadir characterization data are flagged for identification.
13a	The IAS notifies the UP (TRAM) of order completion.
13b	The CVT monitors the IAS OUI for order completion.
14	The UP notifies the CVT of product availability.
15	The CVT retrieves the product from the IAS local disk. For L1 products, a 16-bit QB is optionally generated and provided to the CVT with the Cal Product, depending on product parameters (Step 1 or Step 4b).

5.8.2 Calibration Parameter Generation

A critical part of geometric and radiometric corrections is the generation of calibration parameters by the CVT (see Figure 5-18). Characterization data, generated during L0 and L1 processing, is collected in the IAS database and used to generate calibration parameters. In addition, the RLUT is also created as a component of the calibration parameters.

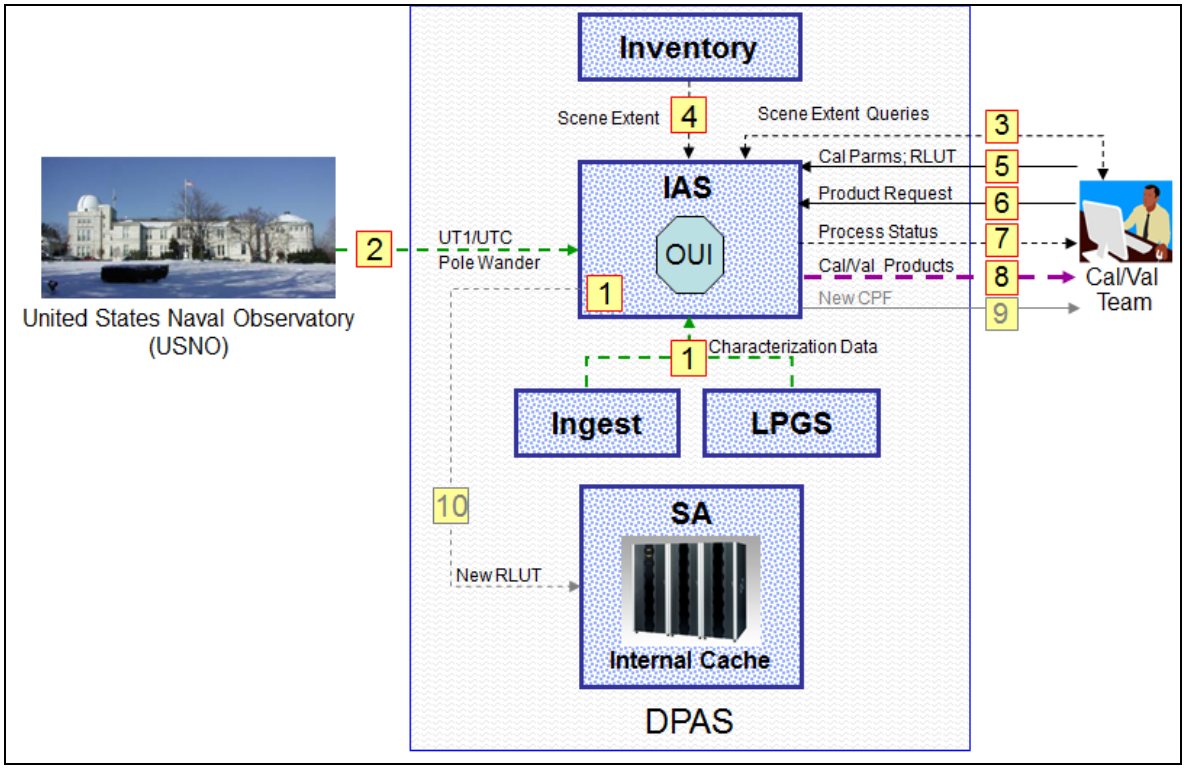

Figure 5-18. Calibration Parameter Generation

Step	Description of Figure 5-18
1	Characterization data generated during LPGS, Ingest, and IAS processing are provided to the IAS characterization database. Off-nadir characterization data are not used for trending calculations.
2	UTC/UT1 and Pole Wander data are extracted from the USNO and used in the development of the new calibration parameters.
3	The CVT uses the IAS OUI to perform scene extent queries and review results.
4	The IAS queries the Inventory Subsystem for scene extent information.
5	The CVT uses the characterization data to generate new calibration parameters, including RLUT information (edit and merge capability).
6	Product requests for the current and candidate calibration parameters are entered into the IAS for subsequent processing. (See subsection 5.8.1).
7	The CVT monitors the IAS OUI for order completion.
8	The CVT retrieves data from the IAS internal disk and assesses the products produced with the current and candidate calibration parameters to determine if the parameters should be published / baselined on the IAS.
9	**OPTIONAL**: The CVT publishes the new calibration parameters in the IAS database. The new calibration parameters are then used as part of ingest (see subsection 5.2.1) and

Step	Description of Figure 5-18
	standard product (see subsection 5.2.2) processing.
10	**OPTIONAL**: As part of the publishing of new calibration parameters, a new RLUT is copied to the Internal Cache for use in L1 processing (see subsection 5.2.2).

5.9 International Cooperators (IC)

5.9.1 Data Validation

The DQA must validate IC Mission Data before the USGS receives Exchange Data from an IC for inclusion in the operational system (see Figure 5-19). ICs may provide Mission Data with associated IDF(s) and validation products (L1 products created by the IC) for validation.

Mission Data validation includes DFCB compliance verification, successful processing by the Ingest and IAS Subsystems, and comparison of the resulting validation products to the reference products (corresponding products generated by LPGS from USGS-acquired Mission Data).

Product validation includes DFCB compliance verification and comparison of the validation products to the reference products.

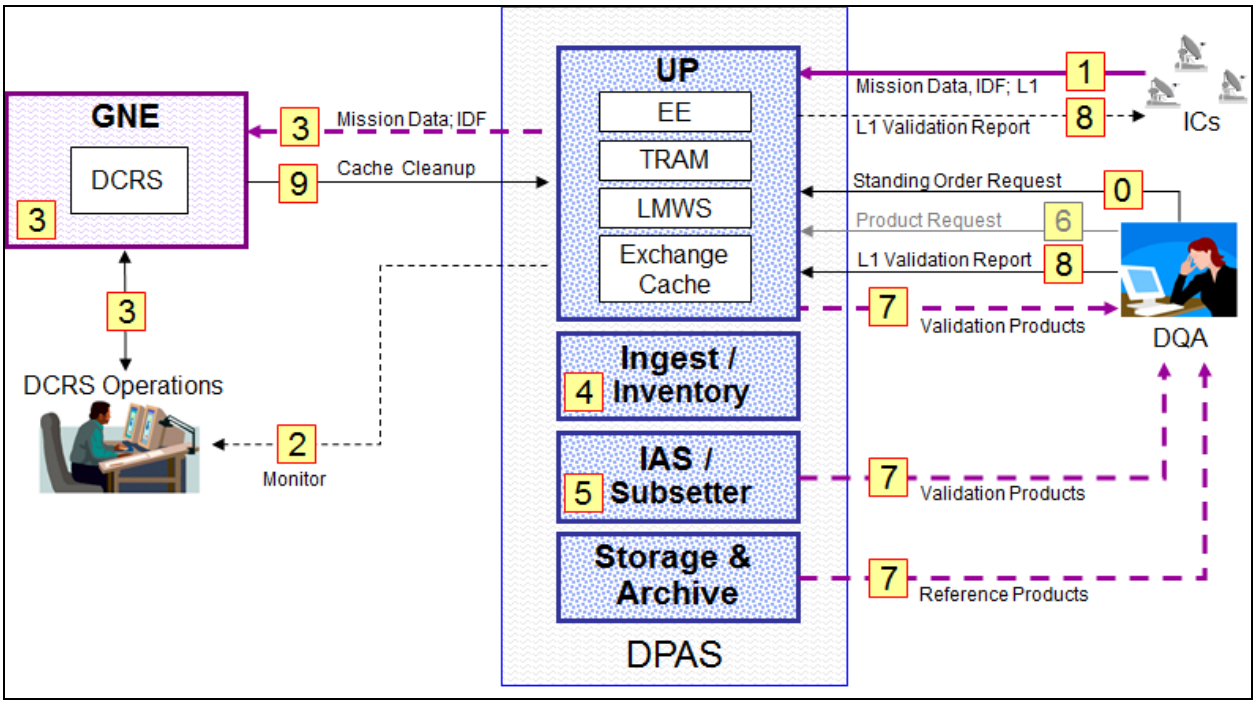

Figure 5-19. Data Validation

Step	Description of Figure 5-19
1	A registered and logged in IC user delivers validation data via the Landsat Mission Web Site (LMWS). The files are stored on the Exchange Cache. (Not shown in the diagram: If electronic delivery is not possible, an IC may send validation data to the DQA on media; the DQA forwards the media to DPAS Operations and an Operator copies the data to the Exchange Cache. This is anticipated to be rare.)
2	**Mission Data Validation**: The DCRS Operator monitors the Exchange Cache for IC Mission Data and IDF files.

Step	Description of Figure 5-19
3	**Mission Data Validation**: The DCRS Operator copies the files from the Exchange Cache to DCRS and manually initiates the processing of the IC data. The DCRS Operator also identifies the IC Mission Data as validation data. This information is provided to the Ingest Subsystem via the Subsystem Interface table.
4	**Mission Data Validation**: The IC Mission Data is ingested; the Inventory is updated (see subsection 5.2.1 for details).
5	**Mission Data Validation**: The IAS generates the validation product and writes it to IAS internal disk. Characterization data collected are flagged as having an IC source (see subsection 5.8.1 for details).
6	The DQA places an on-demand order for the corresponding reference products, if not already available for download (see subsection 5.3).
7	When the validation products and reference products are available, the DQA performs validation analysis of the validation products, comparing the validation products to the reference products.
8	The DQA uploads the results of the validation analysis to the LMWS for access by the IC.
9	When validation is complete, the DCRS Operator cleans up the Exchange Cache.

5.9.2 Data Exchange

After validation of Mission Data from an IC, the IC may provide Exchange Data. Exchange Data is Mission Data received by an IC. It is delivered to EROS in the same way as validation data (see subsection 5.9.1). The processing of IC Exchange Data are functionally the same as standard product generation (see subsection 5.2). Metadata records and file naming are used to distinguish the IC data from LGN data.

5.9.3 Mission Data Distribution

An IC may request Mission Data from the DPAS (see Figure 5-20). USGS policy governs such requests, which are generally limited to a downlink capture circle or other political boundary. As with ingest exchange, delivery on media is an option.

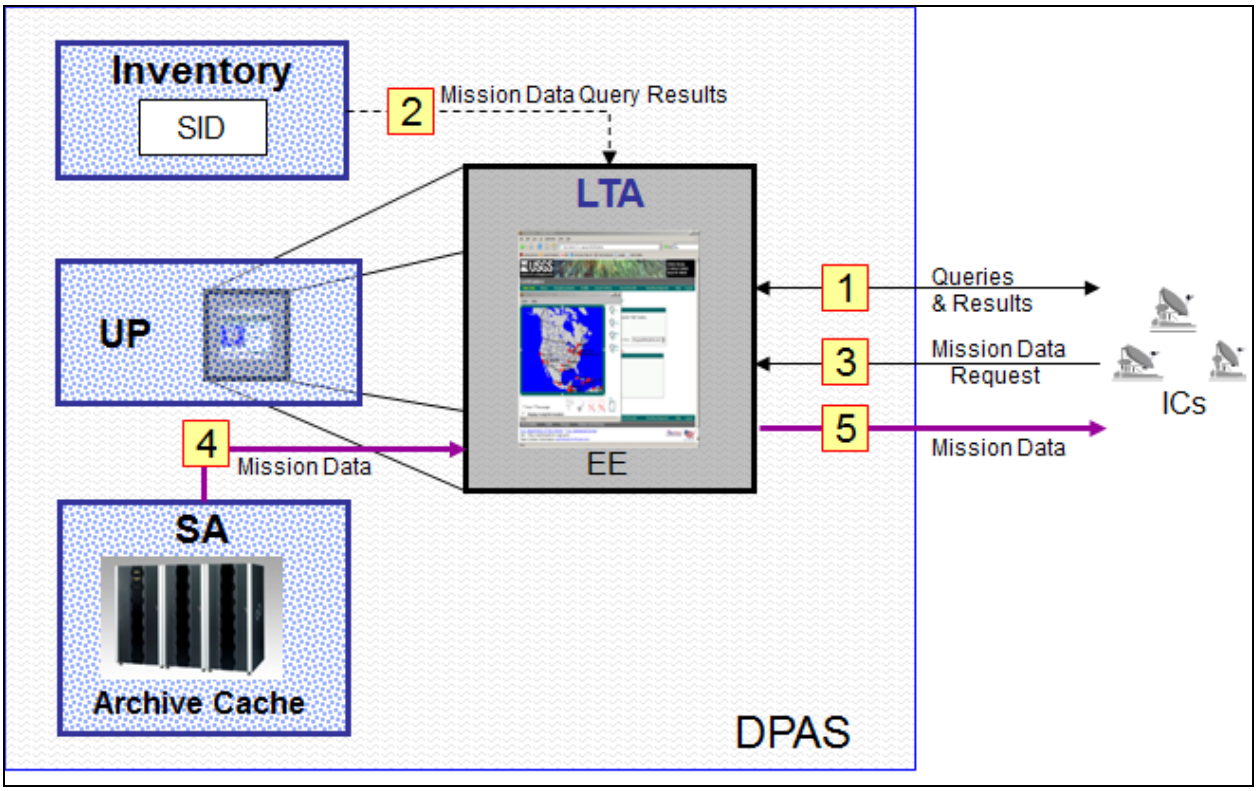

Figure 5-20. Mission Data Distribution

Step	Description of Figure 5-20
1	A registered and logged in IC user reviews the inventory of Mission Data through the UP (EE).
2	The UP accesses the Inventory Subsystem for the Mission Data information.
3	The IC selects and requests the Mission Data to be downloaded.
4	EE coordinates the transfer of the requested Mission Data from the Archive Cache (HSM) to the IC requestor.
5	Via choices made in the EE interface, the IC controls Mission Data transfers on a one-by-one basis or as a group directly to the IC's location via the Internet.

5.9.4 Metadata Ingest

Metadata ingest occurs when an IC provides collected scene information for the IC's holdings (see Figure 5-21). This information is incorporated into the LMD to allow data searching of the IC's holdings. This information is also used as part of overall collection reconciliation (see subsection 5.6.2).

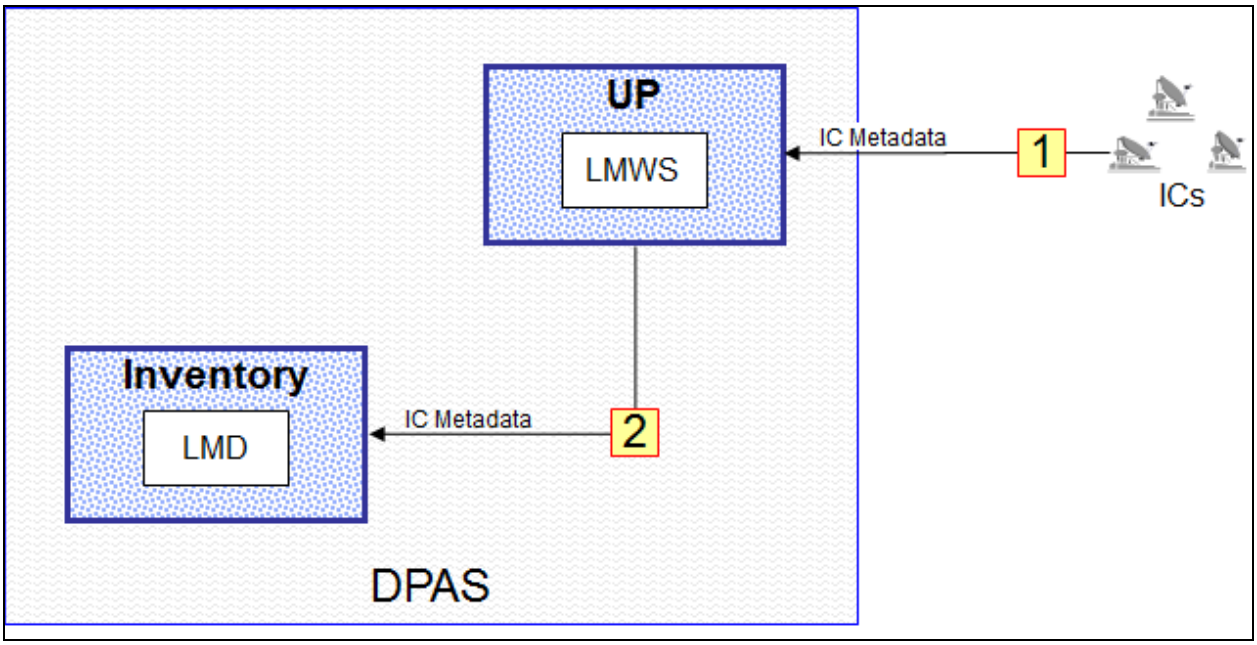

Figure 5-21. Metadata Ingest

Step	Description of Figure 5-21
1	A registered and logged in IC user provides scene metadata (path, row, acquisition data, receiving station ID) to the UP using the LMWS.
2	The UP loads the IC metadata and submits it to the LMD for ingest. UP performs checks to ensure that the provided metadata is compliant with metadata standards.

5.9.5 Communication Products

In addition to DV&E, regular communication between an IC and the DPAS is required in order to coordinate operations (see Figure 5-22). This communication includes administrative messages, problem reports, and station notices and descriptions. ICs interact with the DPAS to facilitate this communication between the IC, DQA, FOT, and others based on the type of message submitted.

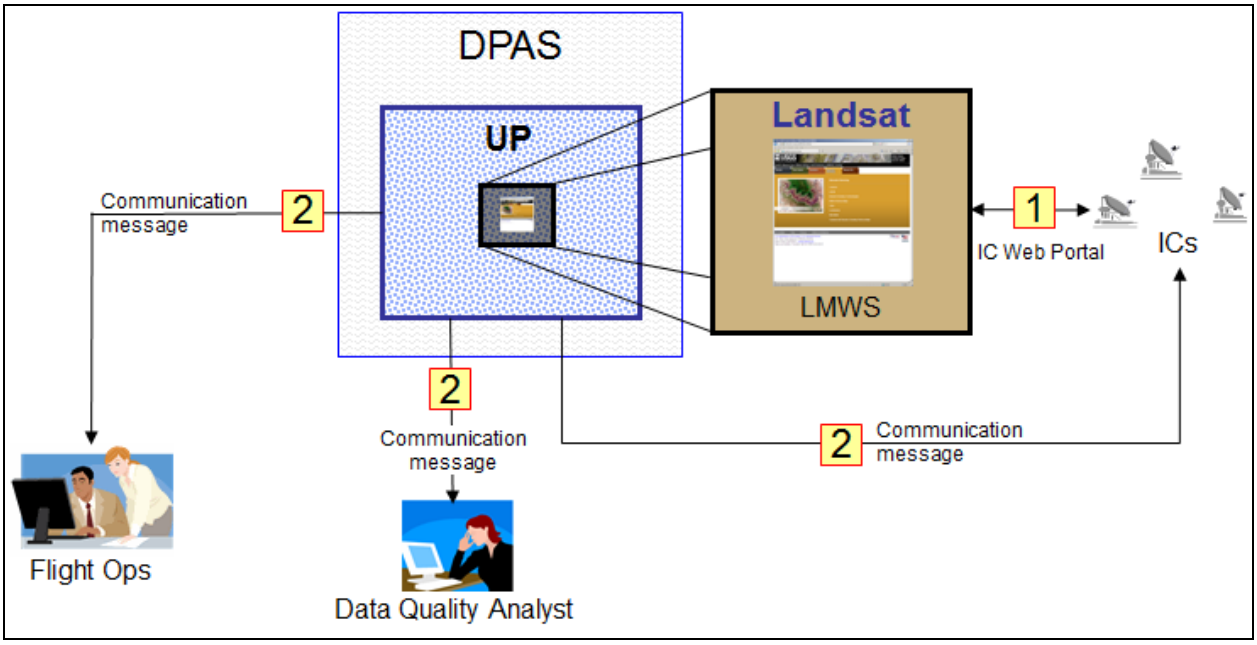

Figure 5-22. Communication Products

Step	Description of Figure 5-22
1	A registered and logged in IC user selects the type of communication message to submit. A corresponding form is presented and the IC enters the required information and submits the message using the LMWS.
2	The UP e-mails the Communication Message to the FOT or Flight Ops contact, the IC, and a pre-determined list of additional recipients, based on the message type. The DQA, as shown, is one example.

5.10 Anomaly Resolution

5.10.1 Ingest Error Recovery

If Ingest does not successfully ingest the Mission Data interval, it sets the status of the record in the Database Interface table to "Failed". At this point, Ingest error recovery may be attempted using operational procedures. These procedures may include retrying from the OUI, retransferring the Mission Data from the DCRS, coordinating with system personnel, or activating failover hardware, depending on the error.

The simplest method is a quick recovery: the Ingest Operator uses the Ingest OUI to select an interval to retry; the Ingest software sets the interval to "Available" in the Subsystem Interface table and tries the interval again (see Figure 5-23).

If the first method is unsuccessful, the DPAS Operator may contact the DCRS Operator to request that the Mission Data be re-transferred. The DCRS Operator manually copies the Mission Data from the DCRS cache to the Ingest directory of the Archive Cache, using a new version number, creates a new record in the Subsystem Interface Table for the new version, and sets the status of the record to Available. Ingest then attempts to process the retransferred interval (see Figure 5-23).

When Ingest has completed processing of an interval and sets the status (either Success or Failed), the DCRS moves the Mission Data from the Ingest directory to the permanent directory of the Archive Cache so the data are archived. Problem data are available for examination and possible recovery at a later time.

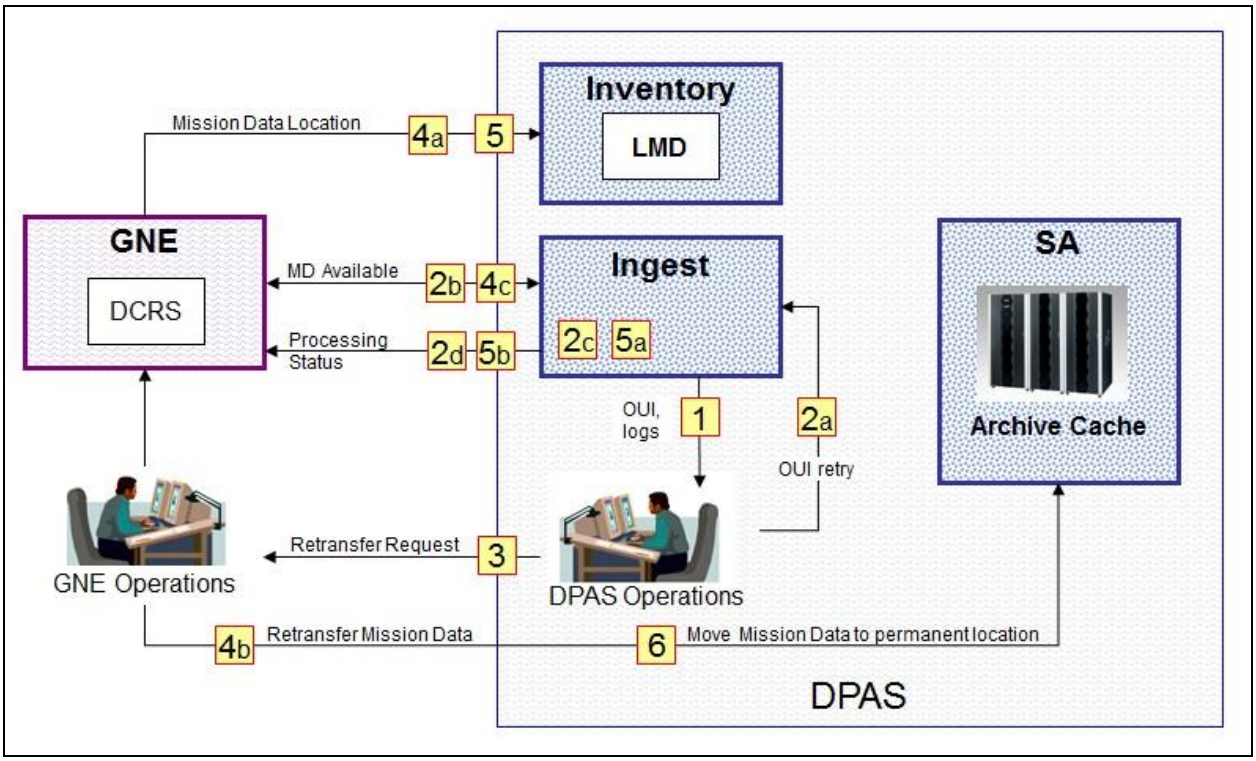

Figure 5-23. Ingest Error Recovery

Step	Description of Figure 5-23
1	Operations staff monitors the Ingest Subsystem processing via the Ingest Subsystem processing OUI. When an error occurs, the OUI reflects a bad status. Operations then follows established operational procedures to recover from a failure condition.
	The simplest retry is performed first:
2	(a) The Ingest Operator uses the Ingest OUI to initiate a retry of the failed interval. (b) Ingest updates the Subsystem Interface table to set the interval status to Available. (c) Processes the interval. (d) Updates the interval status to Success or Failure.
	If the simple retry failed, the Operator may perform steps 2 - 4:
3	DPAS Operator contacts GNE / DCRS Operator to request retransfer of the data.
4	The GNE Operator: (a) Updates the Inventory (inserts a new record for the new version of the Mission Data). (b) Copies the new version of the Mission Data to the Ingest directory of the Archive Cache. (c) Updates the Subsystem Interface table (inserts a new record for the new version of the Mission Data and sets the status to Available).
5	(a) Ingest processes the interval. (b) Updates the interval status to Success or Failure.
6	After each retry, the GNE / DCRS moves the data from the Ingest directory to the permanent directory in the Archive Cache so it is archived, and updates the Inventory with the Mission Data location and processing status.

5.10.2 Product Generation Error Recovery

Product generation error recovery involves consulting operational logs, attempting to restart a L1 process, and examining an anomalous data set by the CVT to determine why the failure occurred (see Figure 5-24).

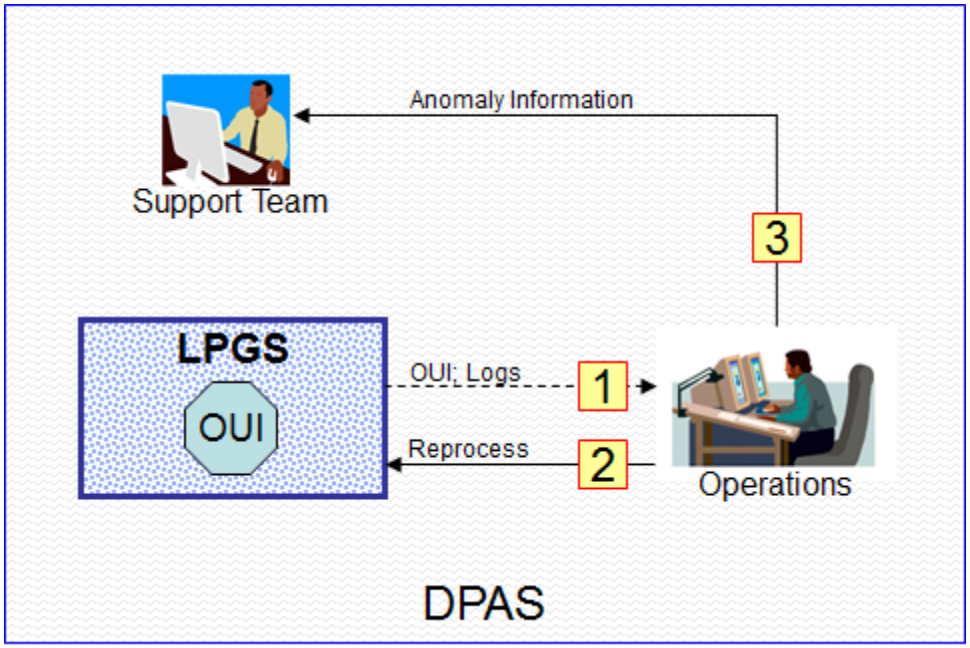

Figure 5-24. Product Generation Error Recovery

Step	Description of Figure 5-24
1	Operations monitor processing through the LPGS OUI for any errors. When any anomalies are found during L1 processing, the processing logs are examined for specific errors. When an error occurs, the OUI reflects a bad status. Operations then follows established operational procedures to recover from a failure condition including the deployment of contingency operational hardware. The procedures may include contacting DPAS support personnel (System Administrators, Database Administrators, Network Engineers, Software Engineers, Systems Engineers, and Hardware Engineers) as required. Operations consults operational procedures, reviews the options specified in the L1 product request and L0Rp images, and attempts to identify the cause of the error.
2	Operations attempts to reprocess the L1 product.
3	If all the above steps fail to resolve the anomaly, it is reported to the Support Team to investigate.

5.10.3 Block Address Data (BAD) Handling

Block Address Data (BAD) is a special type of collection that the FOT manually commands. The LGN stations also manually capture BAD. DCRS automatically transfers BAD to the Archive Cache (see Figure 5-25), where it is archived. It may be retrieved as needed for analysis, primarily by the LDCM observatory vendor.

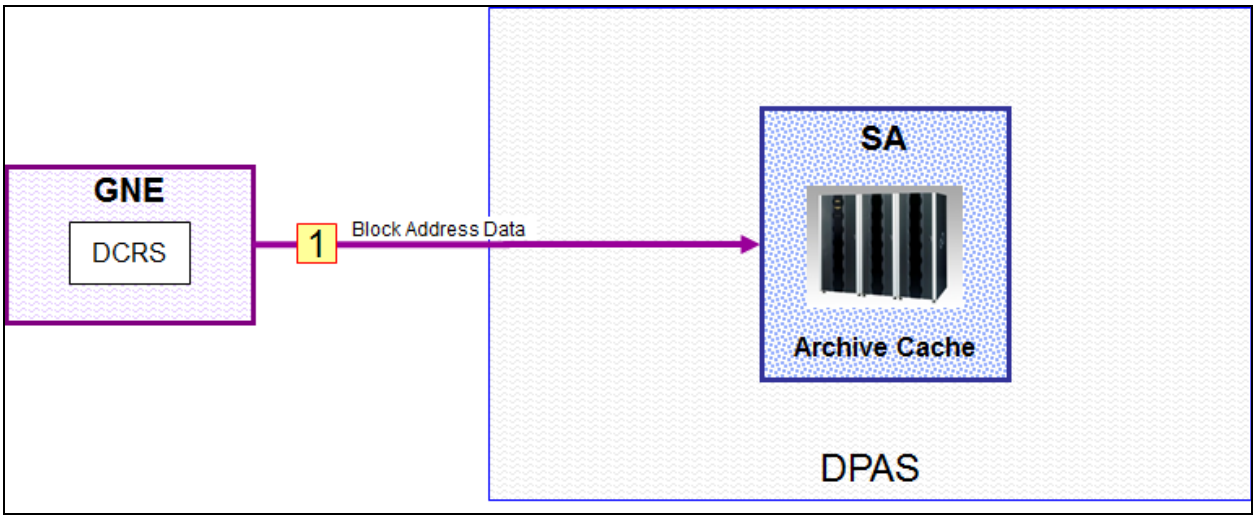

Figure 5-25. Block Address Data Handling

Step	Description of Figure 5-25
1	If BAD is acquired, it is delivered automatically to the Archive Cache for later use.

5.11 Continuity of Operations

5.11.1 Data Recovery

Data recovery of Mission Data, FRB, and 8-bit QB for the DPAS is performed based on the severity of the data loss. LTA operational staff assists in data recovery operations. In the event of a routine data or media loss, the LTA enterprise solution provides the capability to restore data from the (onsite) Backup Archive; if this is unsuccessful, the data may be recovered from the offsite archive (see Figure 5-26). In the event of a catastrophic loss, the Offsite Archive contained at the NARA facility is accessed as part of an overall disaster recovery plan.

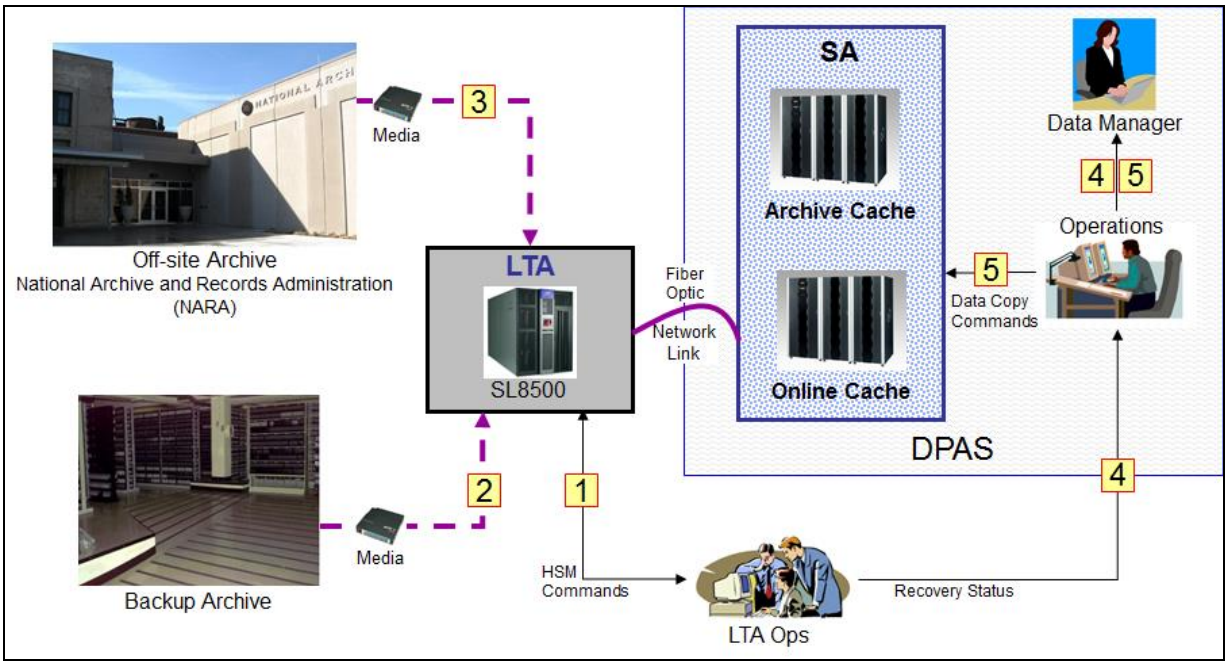

Figure 5-26. Data Recovery

Step	Description of Figure 5-26
1	LTA Operations staff identifies that there is some data loss and recovery is needed. Part of this identification process uses the media management capability (HSM) of the LTA SL8500 system to identify the onsite and offsite media that contain the required data.
2	LTA Operations staff accesses the (onsite) Backup Archive to recover the lost data. Recovered data are copied to the Archive Cache.
3	If Step 2 fails (lost / bad media), LTA Operations staff accesses the Offsite Archive (NARA) to recover the lost data. Recovered data are copied to the Archive Cache.
4	LTA Operations staff contacts DPAS Operations staff and the DM with recovery status.
5	If FRB and/or 8-bit QB data were recovered, DPAS Operations copies these files to the Online Cache, and notifies the DM so that the Inventory can be updated. If successful data recovery occurred, then nominal operations can resume. If unsuccessful, then Operations follows Operations procedures to notify the appropriate personnel.

5.11.2 System Recovery

System recovery occurs after a failure of operational hardware, firmware, or software. The method of recovery depends on the type of failure. The MMO coordinates system recovery, including vendor contacts. Support personnel participate in analysis and system recovery (see Figure 5-27).

Recovery from a hardware failure requires repair or replacement of hardware. Because the DPAS design includes multiple servers and disk arrays for performance, availability, and data preservation, the DPAS may be able to retain a limited operational capability even with some minor hardware failures. Performance and throughput are affected until the failed hardware is replaced.

Recovery from a firmware, operating system, or Commercial Off-The-Shelf (COTS) failure requires the installation of patches or newer releases. Recovery from a DPAS software failure requires DPAS support staff to evaluate and address the problem. Depending on the nature and severity of the problem, DPAS may or may not be able to remain operational.

In case of a major failure, DPAS is probably not operational. Support staff identifies the extent of the failure and assess the impact to the system. The MMO coordinates the recovery with the support staff. LS-SEC-02 Landsat Major Application Contingency Plan describes the steps needed to recreate the operational environment (hardware, operating systems, databases, applications, etc.).

Data recovery may be needed. Archived data (Mission Data and browse) may be recovered from the Backup Archive or the Offsite Archive (see subsection 5.11.1). Recovery of L0Ra data requires reprocessing the Mission Data (see subsection 5.4). Products on the Online Cache may be replaced as needed via on-demand product generation (see subsection 5.3).

A period of testing follows any type of system recovery. The DPAS returns to normal operations following successful tests.

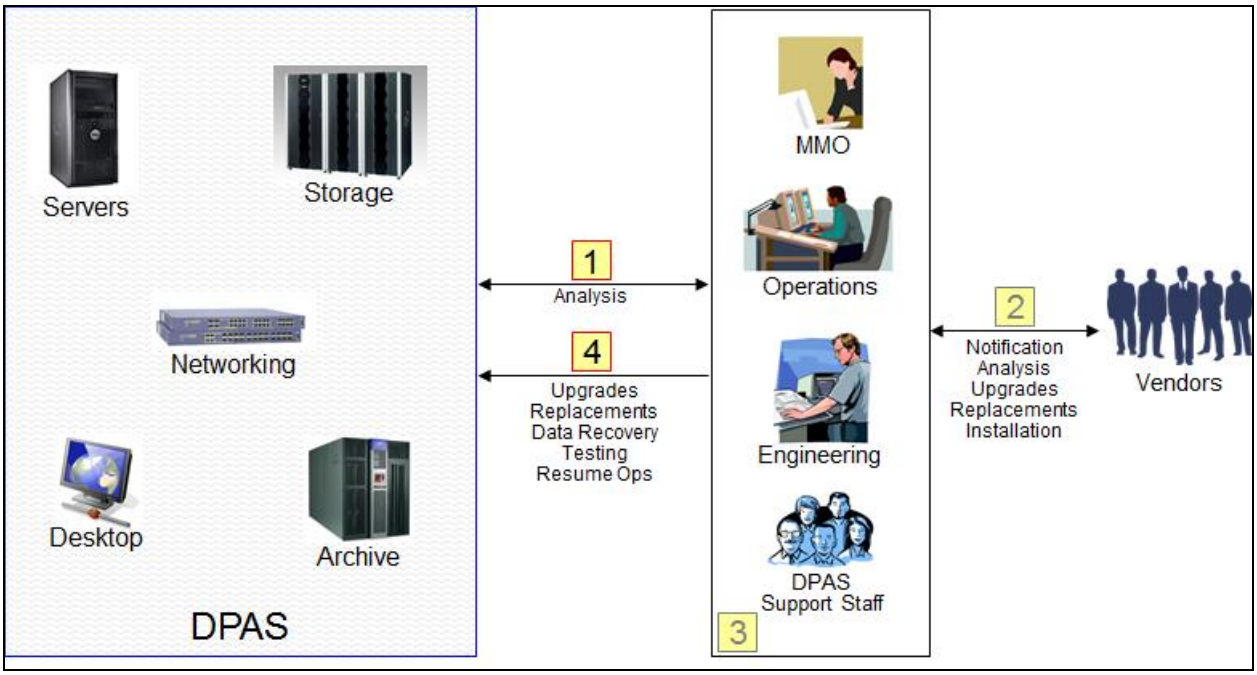

Figure 5-27. System Recovery

Step	Description of Figure 5-27
1	The DPAS Operator identifies the failure and notifies the MMO, Engineering, and DPAS support staff. Support staff work together to identify the source of the problem and the action needed to correct the problem.
2	If the failure is in hardware, firmware, operating system, or COTS, the appropriate vendor is contacted. The vendor performs analysis as needed, and provides the required hardware, firmware, or software upgrades (including installation as needed).
3	If the failure is in DPAS software, the DPAS support staff perform the necessary analysis and software updates.
4	The required upgrades / replacements are made in the operational environment. Data Recovery is performed as needed. DPAS returns to normal operations following successful tests.

5.11.3 Routine Backups

As part of standard DPAS Operations, periodic automated backups are performed on each Subsystem (see Figure 5-28). The DPAS uses the EROS enterprise backup solution, which includes the use of a backup facility in Sioux Falls for secure offsite storage. Media are retrieved as needed from the backup facility.

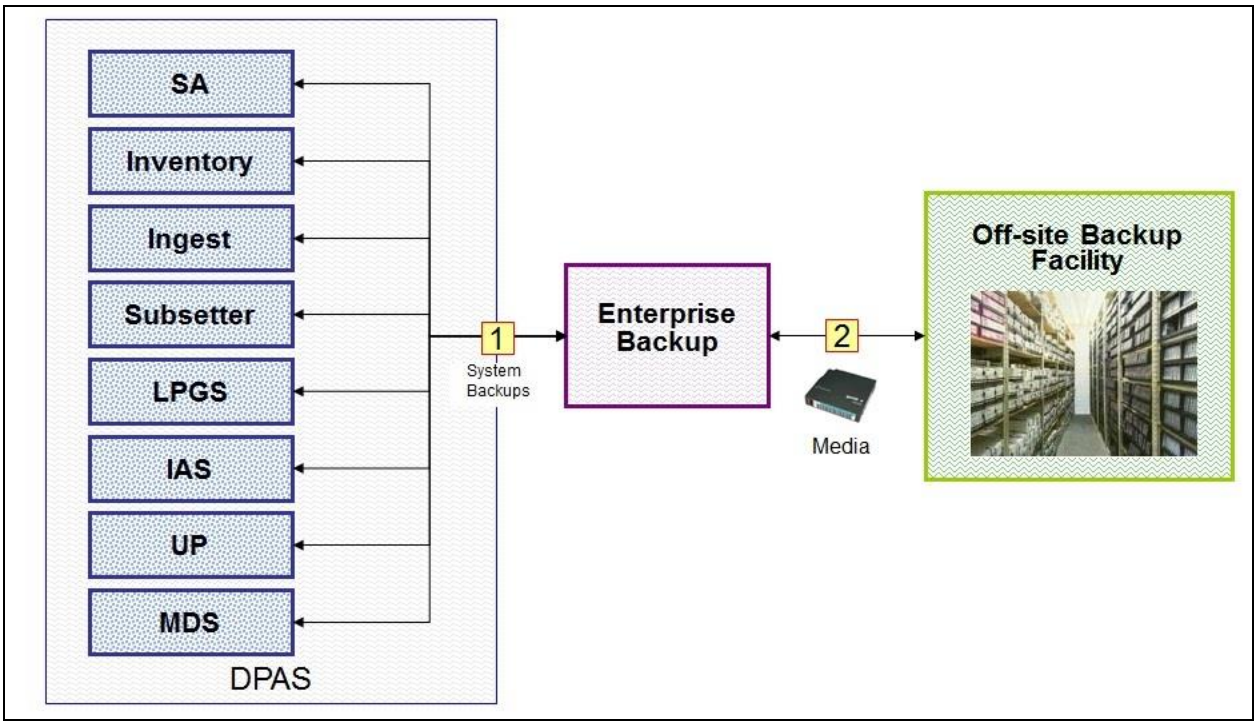

Figure 5-28. Routine Backups

Step	Description of Figure 5-28
1	Periodic automated backups are performed on the DPAS Subsystems, using an enterprise backup system. Automated software on each Subsystem copies operational files to a centralized backup system. In the event of data loss, the enterprise system is used for data recovery.
2	Periodically, media from the enterprise backup system (Legato) are delivered to the offsite backup facility. Media are retrieved as needed from the offsite facility.

References

Please see http://landsat.usgs.gov/tools_acronyms_ALL.php for a list of acronyms.

GSFC. GSFC 427-02-01. Landsat Data Continuity Mission (LDCM) Science and Mission Requirements Document.

GSFC. GSFC 427-02-02. LDCM Operations Concept Document.

USGS/EROS. LDCM-DWG-004. Landsat Data Continuity Mission (LDCM) Data Processing and Archive System (DPAS) N2 Diagram.

USGS/EROS. LDCM-OCD-002. Landsat Data Continuity Mission (LDCM) Ground System (GS) Operations Concept Document (OCD).

USGS/EROS. LDCM-REF-010. Landsat Data Continuity Mission (LDCM) Ground System (GS) Lexicon.

USGS/EROS. LDCM-REF-019. Landsat Data Continuity Mission (LDCM) Service-Level Agreement (SLA) Between the LDCM Project and the Long Term Archive (LTA) Project for EROS-Supplied Services for the Earth Explorer Redesign.

USGS/EROS. LDCM-REF-020. Landsat Data Continuity Mission (LDCM)/Long Term Archive (LTA) CR#1 Mass Storage System Service Level Agreement (SLA).

USGS/EROS. LDCM-REQ-001. Landsat Data Continuity Mission (LDCM) Ground System Requirements Document (GSRD).

USGS/EROS. LDCM-REQ-011. Landsat Data Continuity Mission (LDCM) Ground System Interface Requirements Document (GSIRD).

USGS/EROS. LDCM-REQ-015. Landsat Data Continuity Mission (LDCM) Data Processing and Archive System Requirements Document (DPASRD).

USGS/EROS. LS-SEC-02. Landsat Major Application Contingency Plan.

USGS/EROS. LDCM-MP-007. Systems Engineering Management Plan (SEMP), Landsat Data Continuity Mission (LDCM)