Department of the Interior
U.S. Geological Survey

GROUND NETWORK ELEMENT (GNE) OPERATIONS CONCEPT DOCUMENT (OCD)

Landsat Data Continuity Mission (LDCM)

Version 1.0

August 2009

science for a changing world

Executive Summary

This Ground Network Element (GNE) Operations Concept Document (OCD) is applicable to the Landsat Data Continuity Mission (LDCM) Ground System that presents the operational concepts, their functions, and interfaces. In addition, the operational scenarios are presented for each function of the element. Each scenario represents the sequence of activities that describes the operation of a function.

The information contained in this document will be used by the U.S. Geological Survey (USGS) LDCM Ground System operators and user services organizations will use the information contained in this document.

Document History

Document Number	Document Version	Publication Date	Change Number
LDCM-OCD-006	Version 1.0	August 2009	00014

Contents

Executive Summary ..... **ii**
Document History ..... **iii**
Document History ..... **iii**
Contents **1**
List of Figures **3**
Section 1 Introduction **1**
1.1 Overview 1
1.2 Purpose 1
1.3 Scope 1
1.4 Document Organization 1
Section 2 Element Overview **3**
2.1 Segment Architecture Overview 3
2.2 GNE System Overview 4
2.3 Ground Network Element (GNE) System Objectives 4
2.4 Key Capabilities 5
Section 3 Ground Network Element (GNE) Concept **7**
3.1 LDCM Ground Network (LGN) 7
3.1.1 Antenna 7
3.1.2 Ground Station Control (GSC) 8
3.1.3 S-Band Equipment 9
3.1.4 X-Band Equipment 10
3.1.5 File Routing (DCRS) and Mission Data Storage 12
3.2 Scheduling and Reporting System (SRS) 12
3.2.1 Contact Schedule Forecast Request 13
3.2.2 Acquisition data IIRV 13
3.2.3 Reporting and Control 13
3.3 Data Collection and Routing Subsystem (Interval Collection) 14
3.3.1 DCRS International Cooperator Support 16
3.4 Assumptions and Constraints 17
3.5 Interfaces 17
3.5.1 MOE Interface Connections 18
3.5.2 IPE Interface Connections 19
3.5.3 SAE Interface Connections 19
3.5.4 Observatory Interface Connections 19
3.5.5 GNE Operations Interface 19
3.5.6 Infrastructure Element (IE) Interfaces 19
Section 4 Operations, Staffing, and Phases **20**
4.1 GNE Operations 20
4.1.1 Scheduler 20
4.1.2 Routing and Collection 20
4.1.3 Remote LGN 20
4.2 Operational policies and constraints 20

4.2.1 Training 20
4.3 GNE Transition Phases 20
4.3.1 Transition from Landsat Operations 21
4.3.2 Prelaunch Operations 21
4.3.3 OIV 21
4.3.4 Normal Operations 21
Section 5 Element Level Operational Scenarios 22
5.1 X-Band Mission File Acquisition Scenarios 23
5.1.1 LGN Mission Data Capture scenario 23
5.1.2 Mission data Capture Scenario at LGN EDC (TBD) 24
5.1.3 CFDP Status Messaging Scenario 25
5.2 Mission Data Transfer to DPAS 27
5.2.1 Nominal Mission Data Transfer to the DPAS 27
5.2.2 DPAS Retransfer Requests of Mission Data Files 29
5.3 S-Band Telemetry Services Scenarios 29
5.3.1 Nominal S-Band Support Scenario 29
5.3.2 Telemetry File Playback to MOE 31
5.4 LGN Scheduling Scenarios 31
5.4.1 Contact Forecast Request and Response scenario 32
5.4.2 Station Scheduling 34
5.4.3 Status Reporting 35
Appendix A Acronyms 36
References 38

List of Figures

Figure 2-1. FOS Logical Architecture Overview 3
Figure 2-2. GNE Functional Architecture Overview 4
Figure 3-1. S-Band System Overview 9
Figure 3-2. X-Band System Overview 10
Figure 3-3. CFDP File Transfer with Simulated Error File 11
Figure 3-4. LGN File Routing and Mission Data File Storage 12
Figure 3-5. Automation and Messaging Connections 14
Figure 3-6. Interval Transfer to DPAS 15
Figure 3-7. Interval List Retrieve (TBD) 16
Figure 3-8. International Cooperator Data Ingest 16
Figure 3-9. GNE Interface Contextual Diagram 18
Figure 5-1. GNE Functional Architecture and Interaction 22
Figure 5-2. LGN X-Band Data Capture 23
Figure 5-3. X-Band Mission Capture at EROS 24
Figure 5-4. CFDP status messaging scenario 26
Figure 5-5. CFDP File Transfer Timeline 27
Figure 5-6. Nominal Mission Data Transfer to DPAS 28
Figure 5-7. DPAS Request File Transfer 29
Figure 5-8. Nominal S-Band Acquisition and Processing 30
Figure 5-9. Telemetry File Playback to MOE 31
Figure 5-10. Sample Scheduling Timeline 32
Figure 5-11. Contact Forecast Request and Response 33
Figure 5-12. LGN Scheduling 34
Figure 5-13. Pass Event Status Reporting 35

Section 1 Introduction

1.1 Overview

The Landsat Data Continuity Mission (LDCM) is a remote sensing mission with the objective of providing data continuity to the over 30 years of global multi-spectral data collection and distribution provided by the Landsat series of satellites. The LDCM mission is a satellite and ground based capabilities with objectives to provide:

- Global, moderate-resolution, multispectral data collection similar to earlier Landsat missions
- Long term data archive of LDCM data and products
- Internet based access of LDCM data products access to public
- Continued Landsat International Cooperators (ICs) support

The LDCM Project consists of four segments: the Space Segment (SS), Flight Operations Segment (FOS), Data Processing and Archive Segment (DPAS) and Launch Services Segment (LSS). LDCM is a cooperative effort between National Aeronautics and Space Administration (NASA) and the United Stated Geological Survey (USGS), each agency will have specific responsibilities and together will deliver the mission capabilities.

1.2 Purpose

The primary purpose of the Ground Network Element (GNE) Operational Concept Document (OCD) is to provide a description of the planned functions and operations of the systems/equipment, people and processes that comprise the LDCM FOS Ground Network Element. The OCD presents a conceptual and functional overview of the GNE operations and interfaces with other elements of the LDCM mission in the process of achieving the mission objective.

1.3 Scope

The scope of the GNE OCD includes all functions and systems associated with the LDCM FOS GNE and the external entities that interact with the GNE. The Operations Concept of the FOS GNE encompasses mainly the operation concept of its major components LDCM Ground Network (LGN) which includes the Antenna, X-band Equipment and S-band Equipment; the Data Collection and Routing System (DCRS) and the Scheduling and Reporting System (SRS).

1.4 Document Organization

Section 1: Introduction

The introduction section summarizes the background overview, purpose, scope and document organization.

Section 2: Element Overview

This section provides a detailed description of the design concepts of the proposed GNE. The proposed GNE is composed of the Landsat Ground Network (LGN) stations, Data Collection and Routing Subsystem (DCRS), Scheduling and Reporting System (SRS) and the Network interconnects. The contextual interfaces of the components of GNE within itself and the external elements segments are also detailed in this section.

Section 3: Operations, Staffing and Phases
This section will describe the staffing concept and the purpose and scope of the operations team. The GNE transition through various phases of mission is also detailed in this section.

Section 4: Operational Scenarios
The operational scenarios will cover the most common operational scenarios for the GNE. A short description of each scenario followed by the diagram and a description chart for the number flow of the projected operations in the diagram.

Section 2 Element Overview

This section will describe the overall functionality of the Landsat Data Continuity Mission (LDCM) – Ground Network Element (GNE) as well as its objectives, key capabilities and the interfaces.

2.1 Segment Architecture Overview

The GNE is part of the Flight Operations Segment (FOS) of the LDCM (refer Fig. 2-1). The FOS is composed of the Collection Activity and Planning Element (CAPE), Mission Operations Element (MOE) and Ground Network Element (GNE). The GNE is responsible for providing the Radio Frequency (RF) communication interface between the Observatory and the Ground. The GNE is also responsible for the delivery of the mission data to the Data Processing and Archive Segment (DPAS) and the delivery of the telemetry data and receipt of command data with the MOE of the FOS.

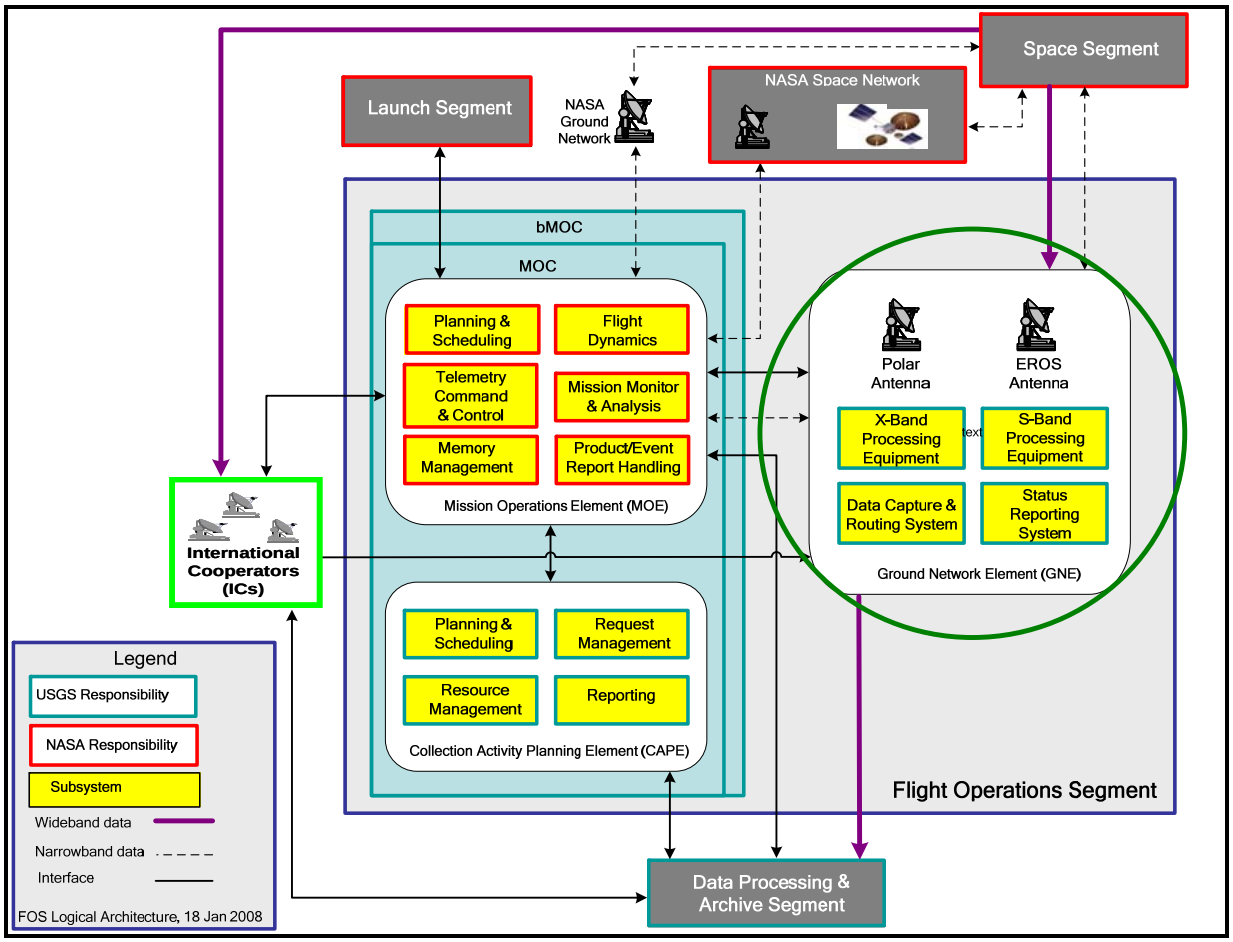

Figure 2-1. FOS Logical Architecture Overview

2.2 GNE System Overview

The GNE will provide four main high level functions for the LDCM mission: the LDCM Ground Network (LGN), Scheduling and Reporting System (SRS), the Data Collection and Routing System (DCRS) and the Network connections. The LGN includes the ground antenna systems, ground station control, S- and X-Band Equipment, storage and file routing. The SRS, GNE cache and DCRS (interval routing) are located at Sioux Falls, SD. The GNE functional architecture is shown in Figure 2-2.

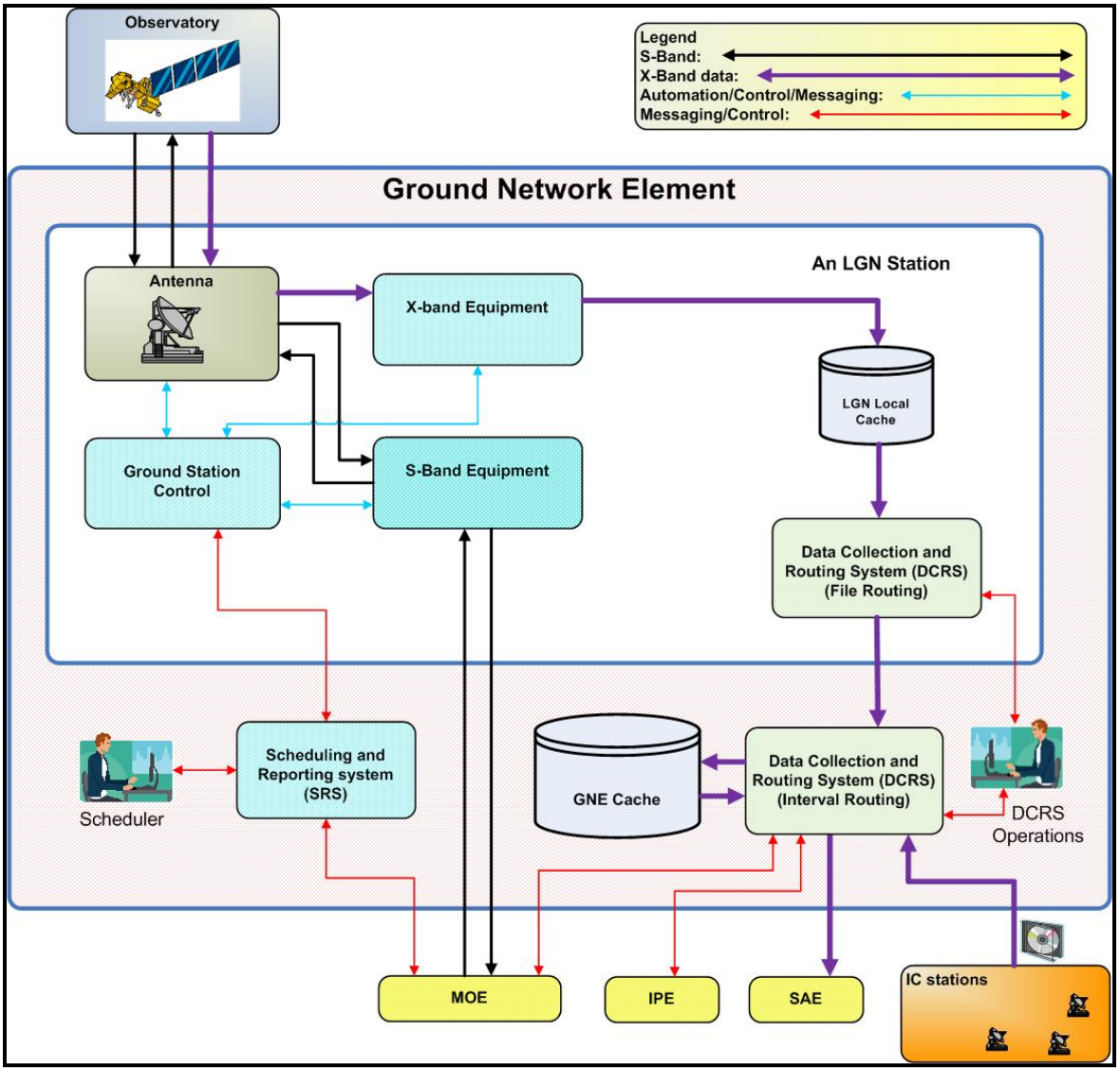

Figure 2-2. GNE Functional Architecture Overview

2.3 Ground Network Element (GNE) System Objectives

The GNE ground antenna systems will provide the S-Band and X-Band RF communication interfaces between the LDCM Observatory and the Missions Operations Center (MOC) and the DPAS. The S-Band communications interfaces include all

required Telemetry Tracking & Command (TT&C) services. The X-Band communications interface includes the downlink of the mission data and services.

The GNE scheduling system along with the ground station control will be responsible for the scheduling of ground station resources for completing the S-Band and X-Band services. The schedule includes all the contact schedule of all the LGN stations for example the ground station at Sioux Falls, SD and the ground station at Fairbank, Alaska. The GNE reporting system will provide the pass event, equipment and station status report to the MOE.

The DCRS (interval routing) located at EROS will coordinate the transfer of the mission data intervals to the DPAS. Data intervals shall be defined by the MOE. The GNE will provide the necessary interface between all the LGN stations and the Infrastructure Element (IE) Central Repository (CR) for the messaging interactions with the DPAS.

The GNE Network comprises both the Local Area Network (LAN) and Wide Area Network (WAN) connections based on the application and requirements. LAN will provide the interconnections for services that are based within EROS and WAN will provide interconnections between all the LGN stations, connection to the NASA Integrated Services Network (NISN) and connection to the bMOE which will be in an off-site location.

The GNE will provide the operations environment to achieve the highest possible mission success rates in compliance to the limits of the mission requirements. The GNE will coordinate with the MOE systems to provide the best possible mission coverage within the limits of the mission requirements. The transmission of the mission data files from the observatory will utilize a new technology (CCSDS File Delivery Protocol) that will significantly reduce the space to ground transmission errors.

2.4 Key Capabilities

The key capability of GNE is the RF communication links between the MOE and the observatory in S- and X-Bands. The S-band capability includes the command uplink from the MOE to the observatory and telemetry downlink from the observatory to the MOE using the S-Band Equipment. The X-Band capability includes the downlink of the mission data from the observatory and routing the mission data interval to the DPAS using X-band Equipment and the Data Collection and Routing System (DCRS). These key capabilities of GNE are shown in Figure 2-3.

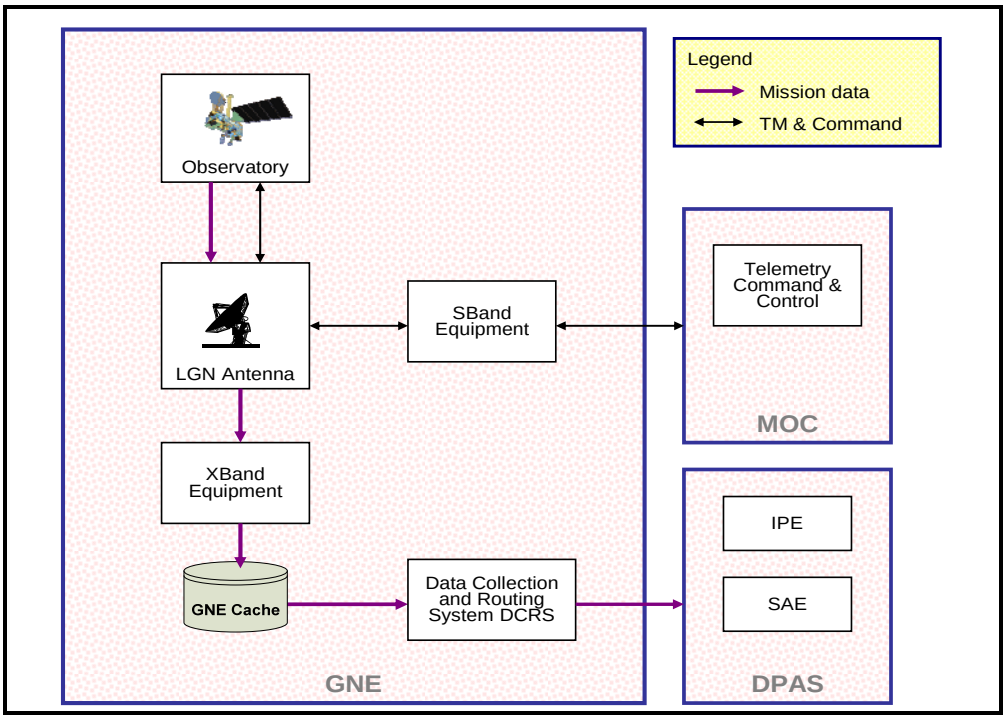

Figure 2-3. Key System Capabilities

The GNE will allow for temporary storage of all mission data files. Contingency modes of this storage will allow the GNE cache to store 90 days of captured mission files or more.

Section 3 Ground Network Element (GNE) Concept

The GNE concept section will be broken into four subsections for the four main components of GNE. The subsections provide the details of the Landsat Ground Network (LGN), the Scheduling and Reporting System (SRS), the Data Collection and Routing System (DCRS) and the Network connections.

3.1 LDCM Ground Network (LGN)

The LGN will be a collection of ground stations and ground station equipments supporting the objective of GNE. All LGN ground stations within the GNE will provide the same set of services to the LDCM mission. The current configuration of LGN utilizes the ground station located in the EROS campus Sioux Falls, SD and a Polar ground station possibly located in Fairbanks, Alaska and possibly another polar ground station located in Svalbard, Norway (TBC).

The typical LGN ground station will consist of an antenna with the associated control unit (which may be automated TBC), S- and X-Band Equipments and mission data storage (LGN Cache) and file routing (DCRS) subsystem. The LGN antenna will have the direct interface to the observatory for the RF communication links. The S- and X-Band Equipments of an LGN stations, through the Ground Support Equipments (GSE) of GNE will complete the other end of the interface with MOE and DPAS. The LGN ground stations will simultaneously support both the S- and X-band communications with the observatory for the MOE and the DPAS.

3.1.1 Antenna

The antenna will provide the front end RF transmit and receive interface for S-Band signals and receive only interface for the X-Band signals with the observatory. The received S and X band signals will be down converted and then routed to the control room for processing. The S-Band RF signal will be provided by the control room to the antenna system for transmission to the observatory utilizing a high power amplifier.

The antenna systems of the LGN at EROS Center, Sioux Falls, SD may be the existing systems augmented to accomplish the LDCM GNE requirements and/or a totally new antenna system (TBC) will be procured and used for LDCM. All upgrades and/or augmentations for each antenna system shall be contained in a separate document that specifically details the operation. The antenna systems shall be contained within a radome assembly if possible to maximize the life cycle of the antenna system and to protect the asset from the potential calamities of nature.

3.1.1.1 Antenna Control Unit (ACU)

The antenna will be provided with an accurate tracking of the observatory utilizing both the S-band and X-Band tracking methodologies. The tracking provided shall include both program predicted tracking and auto tracking. The predicted tracking method will rely on the acquisition data provided by the MOE and allow for initial acquisition of the observatory at Acquisition of Signal (AOS). Once the observatory has achieved considerable Earth elevation the Ground Station Control will switch to an auto tracking

mode allowing for precise tracking of the observatory based on the received signal from the observatory. In general tracking systems will prefer X-Band over S-Band signal but varies depending on the available signals from the observatory.

The antenna control unit or system will provide in real time the acquisition information prior to the start time of the pass event based on the predicted tracking. Once the antenna control unit is configured and ready to support the pass event, it will provide a status message to the local Ground Station Control. The antenna control unit will also save all information during the pass event for troubleshooting and trending purposes. The information contained shall include power levels, angles, offsets, etc. The collected information will be known as an angle file will be included in the post pass event report to SRS.

The possibility of integrating the ACU into the automation philosophy of the GNE called Local Automation Controller (LAC) is being considered for the LGN at EROS facility.

3.1.2 Ground Station Control (GSC)

The Ground Station Control at each LGN has the control of the station equipments like ACU, S-Band Equipment, and X-Band Equipment etc. It will also monitor the equipments throughout the pass event and provide the status information to the MOE through the Scheduling and Reporting System (SRS).

The Ground station Control for each LGN station may be developed independently based on the equipment deployed at each of the LGN station. Though the configuration of the Ground Station Control of each LGN station differs, functional and performance requirement will remain same. A common interface called the SRS for all the LGN station control equipments will be provided and located at EROS facility.

The GSC is also called as Local Automation Controller (LAC) in stations where automation is implemented. In such cases the functions that are described under Ground Station Control will be performed by the LAC. The LAC will have both manual and automated modes of operation.

The LAC for the LGN at EROS facility is currently part of the proposed automation philosophy of the GNE. The common interface for all the LGN station control SRS is also part of the proposed automation philosophy of the GNE that will be located at EROS facility.

3.1.2.1 Schedule and Acquisition Data Process

The GSC will receive a contact schedule every 24 hours from the MOE through the SRS. The GSC will ingest this schedule and will create a master contact schedule for 24 hours. The GSC will also receive the acquisition data files along with the contact schedule from the MOE. The acquisition data will be ingested and stored into a master acquisition data list or directory.

The 24 hour master contact schedule along with the master acquisition data list will be forwarded to the ACU, S- and X- band equipments etc in preparation for all the pass events within that 24 hour period.

Prior to each pass event, the GSC will initiate the prepass event list which includes the predicted acquisitions data files, equipment configuration setting information and schedules to the ACU, S- and X-Band equipments etc. This will allow the antenna controller to process the acquisition data files and create the orbital prediction angles. The predicted angles are needed to support a nominal satellite acquisition and to configure all the necessary equipment and verify all configurations and settings.

3.1.3 S-Band Equipment

The S-Band Equipment will receive the down linked S-Band telemetry from the antenna and send to the MOE and forward the Commands from the MOE to the antenna for uplink to the Observatory. The receive interface include the reception and processing of real-time and stored telemetry from the observatory. The current concept of the S-Band downlink and uplink chain is shown in Figure 3-1.

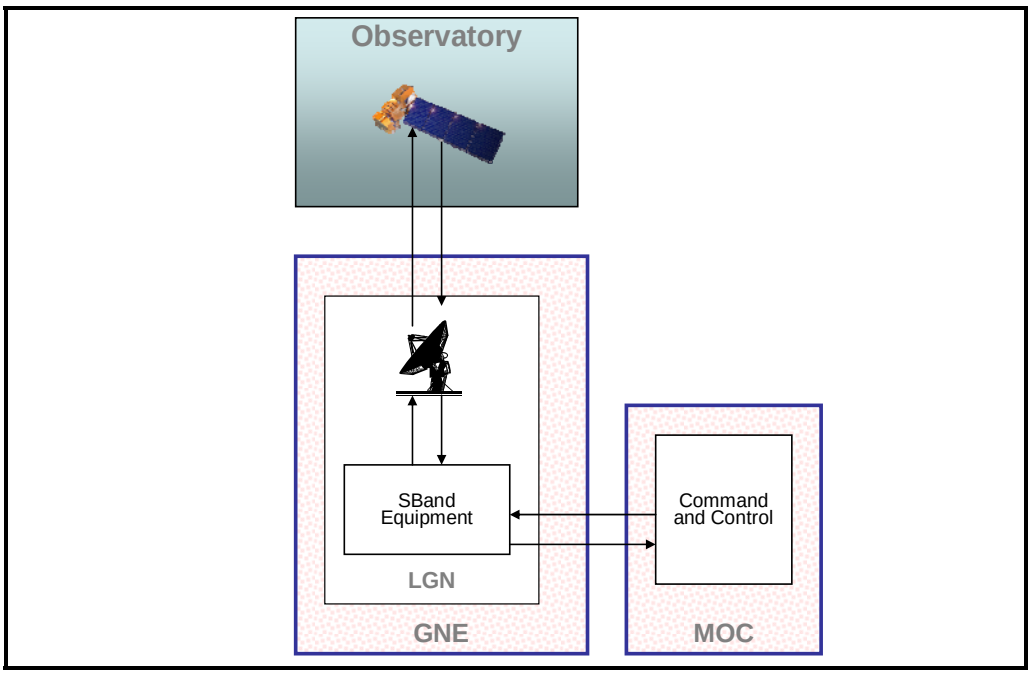

Figure 3-1. S-Band System Overview

3.1.3.1 S-Band System Theory of Operation

The S-Band Equipment in each LGN station may have varied equipment configurations but the functional and performance requirements will be the same. The purpose of the S-Band system as described above is to provide the RF interface between the observatory and the MOE. Though the configuration of this equipment differs between the LGN stations, the connection to the MOE and the observatory will remain same.

The S-Band Equipment will have both receive and transmit components. The S-Band Equipment will ingest the S-Band signals provided by the antenna system, demodulate and bit synchronize the signal into a digital telemetry stream. The digital telemetry stream will be transferred to the MOE and also recorded to a local disk for retransmits and redundancy. The MOE will send the encrypted digital command stream to the S-Band Equipment which will modulate and up convert the command stream into a transmittable S-Band RF signal. The S-Band RF signal will then be routed to the antenna system for transmission to the observatory.

The S-Band Equipment will have the ability to provide playbacks of the telemetry and command data files to the MOE from the 180 days (TBC) local storage.

3.1.4 X-Band Equipment

The X-Band Equipment provides the interface between the Observatory and the DPAS for the downlink of the mission data files as shown in Figure 3-2. Antenna will route the X-Band signal which is down converted to an Intermediate Frequency (IF) to the X-Band Equipment. The X-band Equipment will demodulate the ingested IF (X-band signal) signal and the digital data output will be bit synchronized and captured in an internal (GNE) and external (DPAS) disk cache.

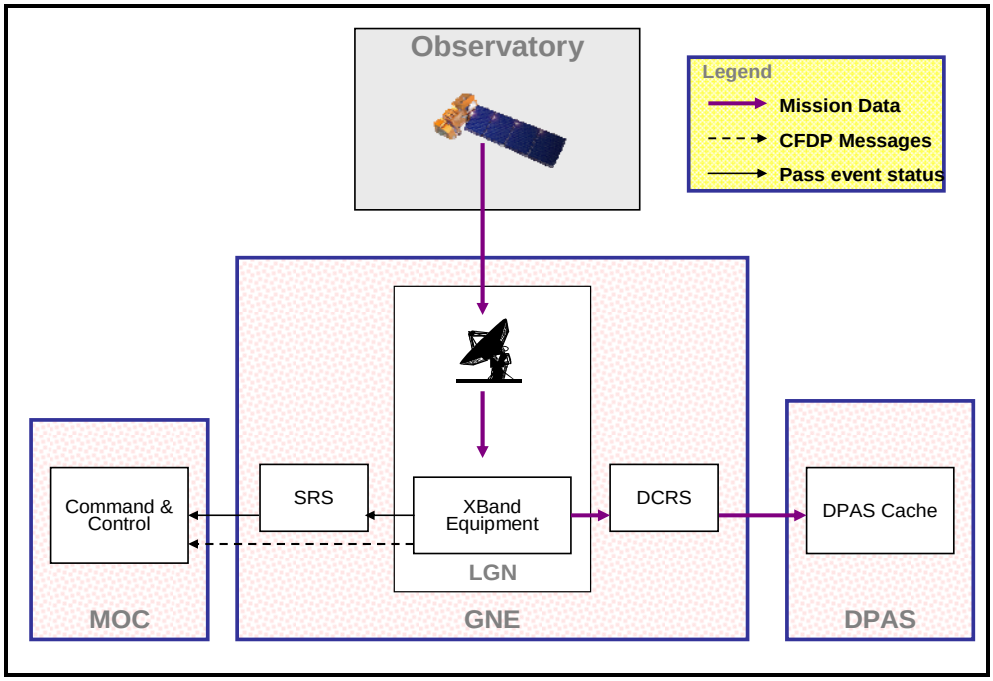

Figure 3-2. X-Band System Overview

The X-band Equipment will provide the status and configuration affirmations to the GSC system during pre-pass, pass and post pass events to the SRS. The SRS will pass the post pass report to the MOE.

The X-Band equipment in each of the LGN stations may have independent equipment configuration but the functional and performance requirements will be the same. The

purpose of the X-Band system as described above is to provide the RF interface between the observatory and the DPAS. Though the configuration of this equipment differs between the LGN stations, the connection to the DPAS and the observatory will remain same.

The X-Band Equipment will provide in real time the CFDP (Consultative Committee for Space Data Systems (CCSDS) File Delivery Protocol) messages to the MOE shown in Figure 3-2. The CFDP messages provided the transmission status of each mission data file captured.

3.1.4.1 CCSDS File Delivery Protocol (CFDP)

The CFDP process substantially reduces the transfer errors from the observatory to the ground station. The reduction is provided by the ability of the MOE and/or the Observatory to reschedule the re-transmit of a file to the ground after it has failed transmission. The extent of the file playback and retransmission will be covered under the observatory operations concept. Figure 3-3 shows the CFDP file transfer with a simulated error file.

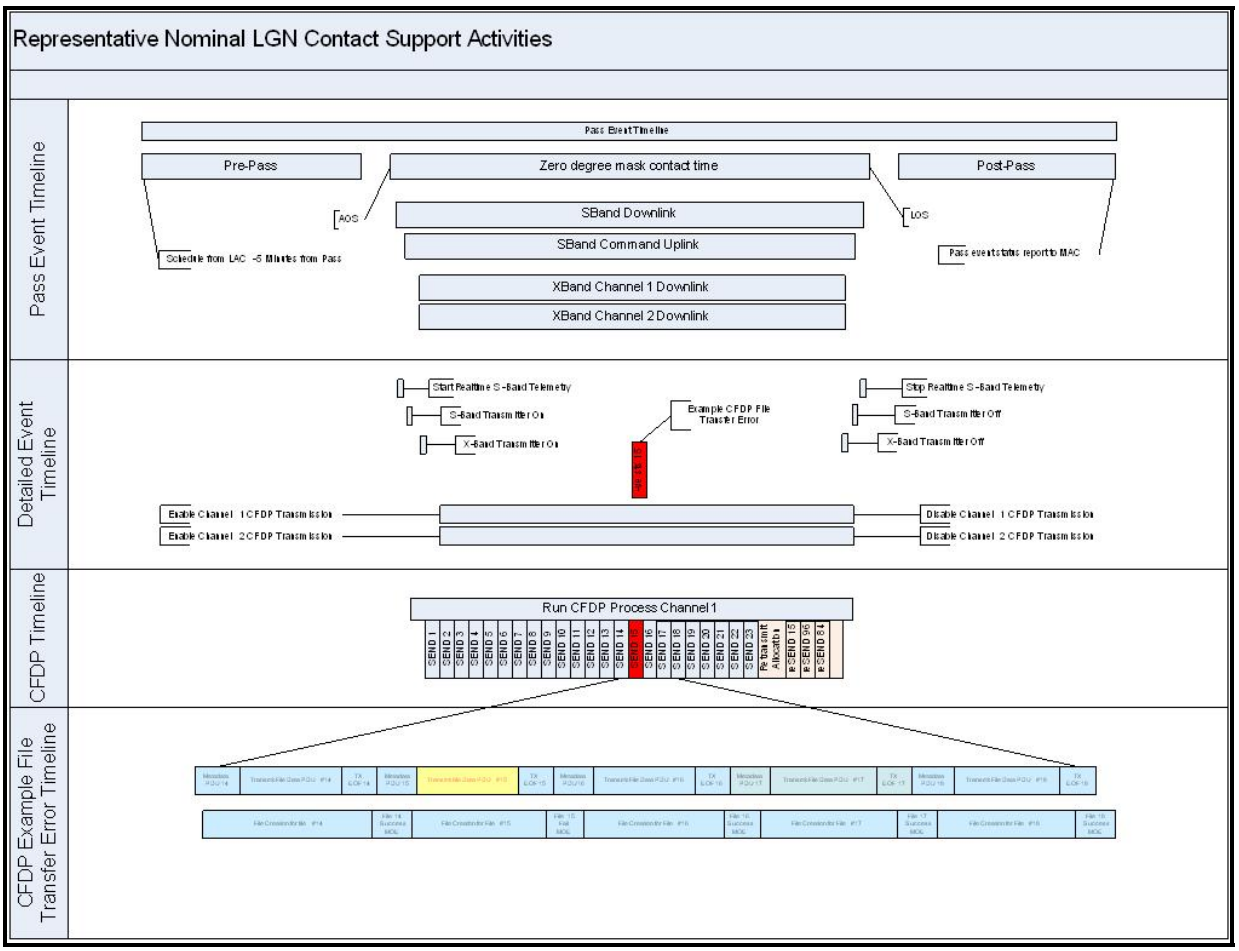

Figure 3-3. CFDP File Transfer with Simulated Error File

3.1.5 File Routing (DCRS) and Mission Data Storage

In a typical LGN station the mission data will be ingested by the local cache and the Data Collection and Routing Subsystem (File routing) will forward the mission data files to the GNE cache. The DCRS (Interval routing) located at the EROS facility will collect the files from the GNE cache and forward to the DPAS cache. Figure 3-4 outlines the path of mission data files through the cache devices and the DCRS subsystems to the DPAS.

The GNE cache is located at the EROS facility will be the main storage for all mission data files captured from all the LGN stations. The GNE cache will store all locally captured, WAN received and restored mission data files for up to 90 days. The remote LGN stations will provide their own 90 day rolling cache to provide redundancy and contingency. The cache devices will be a “rolling” archive where the oldest files will be removed in order to make space for the newest files. The DCRS will diligently handle all file movements, deletions and restorations.

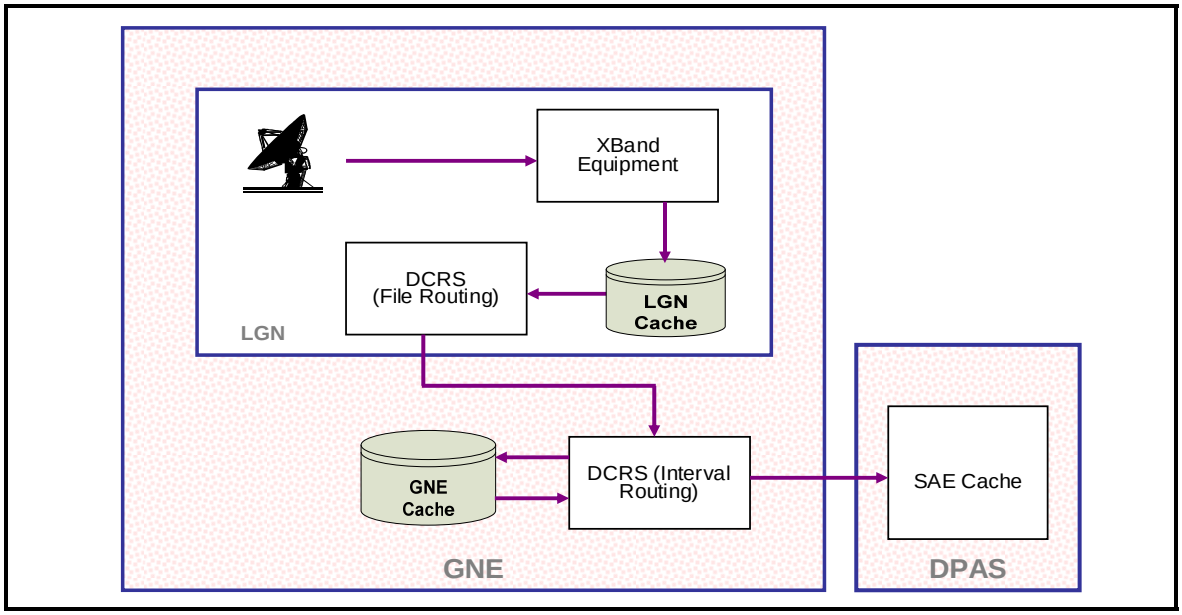

Figure 3-4. LGN File Routing and Mission Data File Storage

3.2 Scheduling and Reporting System (SRS)

The Scheduling and Reporting System (SRS) is also a part of the automation philosophy of the GNE. The SRS will be the centralized schedule controller for the entire GNE supporting all LGN stations while the GSC/LAC is a direct automation interface to the ground station components. The SRS and GSC/LAC will work together for scheduling, reporting and configuring equipments. The SRS will be responsible for all the scheduling, acquisition data and pass event status reporting between the MOE and the GSC.

The SRS will collect status, errors, and other information from the ground station equipment via the GSC/LAC of the LGN. The reporting functions will allow the GNE to

notify the MOE and other external agencies of problems within the GNE that may result in reduced LGN availability.

The SRS, in coordination with the GSC will schedule the EROS ground station resources for optimal mission performance based on preset mission priorities and objectives.

3.2.1 Contact Schedule Forecast Request

The MOE will issue a contact schedule forecast request to the SRS on a weekly basis. The schedule forecast will contain all potential pass events for a 3 weeks period. The SRS will automatically or manually respond to the forecast request with the contact forecast confirmation, by providing probable system resources that will be utilized for each of the future events. The MOE will utilize the forecast request confirmation response to better control the contact schedule generation process. The forecast request confirmation from SRS to MOE will also provide all the known station outages, allowing the MOE to schedule accommodating the outages.

3.2.2 Acquisition data IIRV

The SRS will receive the acquisition data from the MOE on a daily basis for all the pass events for approximately a 3 day duration. The SRS will create a master acquisition data list or directory for distribution to each of the LGN station.

The SRS will provide the GSC of each LGN station with the pass event specific acquisition data file to support the schedule of the pass event. The acquisition data will be forwarded along with the contact schedule distribution.

3.2.3 Reporting and Control

The GSC of all the LGN stations will provide the SRS with a post pass status report which consists of information regarding contacts, station status, errors, outages and any other conditions showing deviations from nominal. The SRS will forward the post pass status reports that are ingested from the individual LGN stations to the MOE shown in Figure 3-5. The SRS will collect this information into a master station log for each LGN station and store it in a local cache. The amount of information collected and reported will be outlined in the Automation Systems Design Document and the Automation Systems to MOE Interface Control Document (ICD).

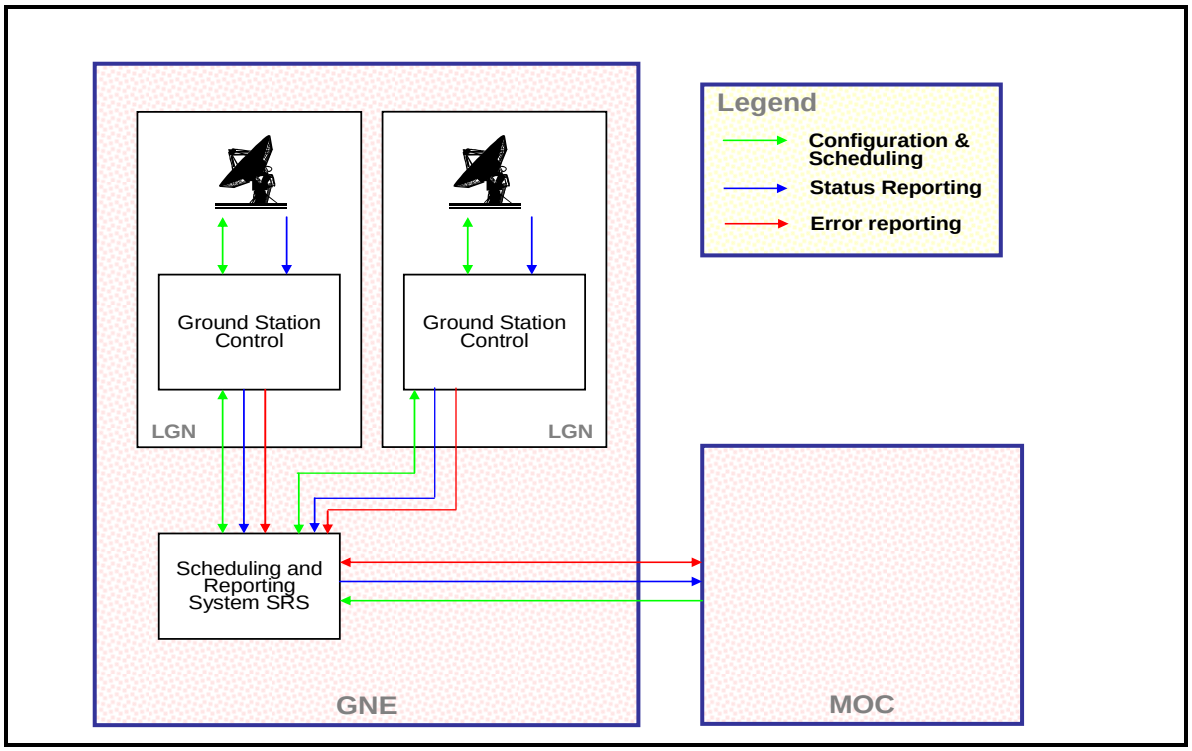

Figure 3-5. Automation and Messaging Connections

3.3 Data Collection and Routing Subsystem (Interval Collection)

The DCRS (interval routing) located at EROS facility will provide the interface between the GNE and the DPAS for mission data files transfer. The DCRS will receive the new scene to interval mapping table from the MOE. The main function of the DCRS will be to monitor the collected mission data files until all files of a known interval have been successfully ingested in the GNE cache. The DCRS shall transfer all the files of the satisfied intervals to DPAS (SAE Cache) and send a notification message of the interval delivery to the IPE shown in Figure 3-6. The message will include the meta-data for the mission files and interval information.

The DPAS will send a reply message once the interval has been successfully ingested. The reply message from the DPAS will allow the DCRS to flag the files included in the interval as successfully ingested to be deleted from the GNE cache.

The DCRS will compose the mission data interval directory report based on the successfully ingested messages from the IPE and forward to the MOE. The MOE use this information for the Observatory Solid State Recorder (SSR) memory management completing the feedback loop.

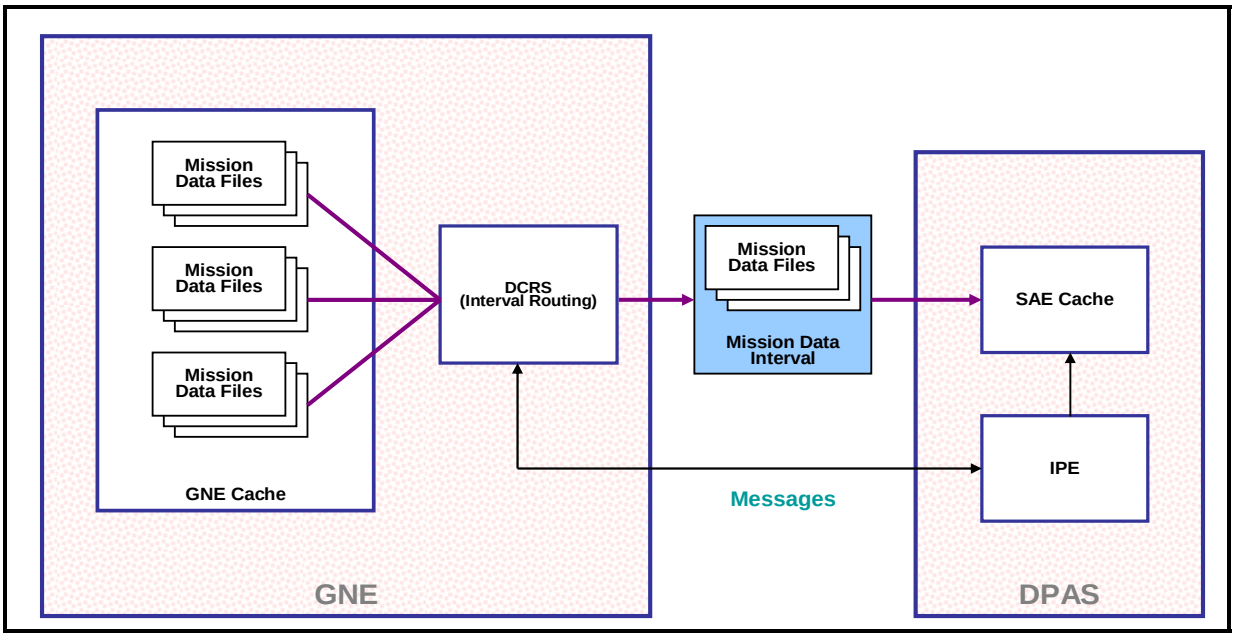

Figure 3-6. Interval Transfer to DPAS

The stored mission files on the cache may be retrieved manually or automatically from the DCRS. The DCRS will have a contingency mode stopping the transfer of mission data files to the DPAS. The contingency mode will continue to keep data rolled on to the disk cache device until the DCRS return to service. In the case of a DPAS failure, the file storage and playback will be manually coordinated by the DPAS to GNE operators.

The interval file list is generated by the MOE and placed in the central repository (TBD). The MOE will notify the DCRS that a new interval list was delivered to the central repository. The DCRS will retrieve and ingest the interval file listing into a master interval table shown in Figure 3-7.

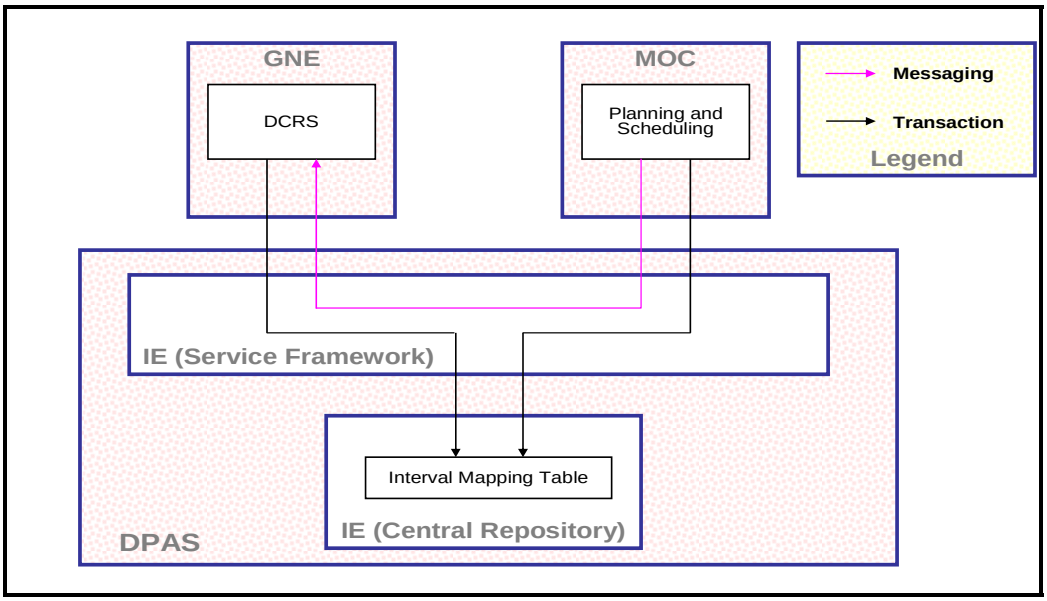

Figure 3-7. Interval List Retrieve (TBD)

3.3.1 DCRS International Cooperator Support

The DCRS will allow mission data files to be ingested from International Cooperators (ICs). The IC mission data files will be used to validate the capability of the IC stations to successfully receive the X-Band signal, capture data and ingest the mission data files. The IC mission data files will be unique to the DCRS because these files will not be identified in an interval mapping table from the MOE. The DCRS will generate interval information based on the input from the operator interactions. The IC interval file information will be part of the message sent to the IPE following the transfer of the IC mission data files of an IC interval to the SAE cache (Figure 3-8).

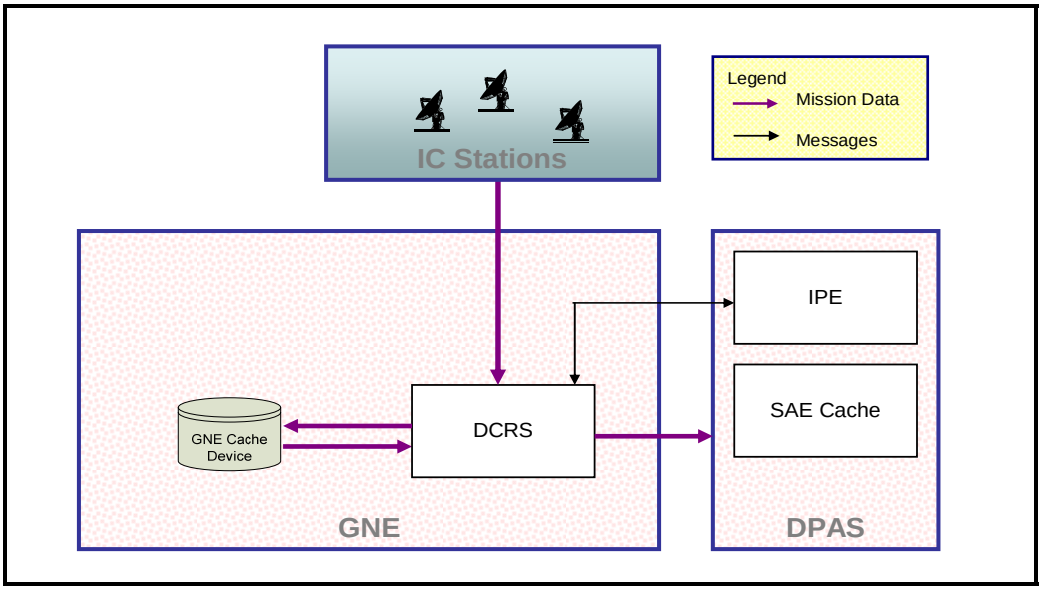

Figure 3-8. International Cooperator Data Ingest

The DCRS will remove the IC mission data files upon receiving the successful ingest message from the DPAS.

3.4 Assumptions and Constraints

The high level assumptions and constraints will be identified in this section. The major assumptions are the support for the existing Landsat missions, the placement of the ground stations in Sioux Falls and Fairbanks, and the observatory unknowns. The one critical constraint is the observatory vendor has not been identified at this time. Each of these constraints will be explained in greater detail below.

The current assumption for the existing Landsat missions, Landsat 5 and 7, are that the ground station(s) will support these mission until their individual end of life occurs. The data reception, for the existing Landsat missions, will remain a high priority until they are decommissioned. The augmentation of the existing ground station will take this mission priority into consideration for all activities. The current Landsat missions will not be disrupted or degraded due to any augmentation of the ground station in preparation for the LDCM mission unless negotiated at the project level.

The ground stations at Sioux Falls South Dakota and the remote station in Fairbanks Alaska are also considered major system assumptions. The premise that these stations will be located in Sioux Falls and Fairbanks are due to current considerations and assumptions, however no decision has been made on their actual locations. (TBC)

The observatory vendor has not been identified which affects the entire operations concept document. The individual specifications of the observatory will not be known until a vendor is identified and the specifications have been approved. Due to the severity of the unknowns of the observatory the operations concept document will have to be considered an assumption where any observatory interfaces are described.

3.5 Interfaces

GNE is interfacing with the Observatory, MOE, IPE, SAE, IE and IC that are described conceptually in the previous sections. The contextual interfaces with the names that describe the purpose of these interfaces is shown in Figure 3-9.

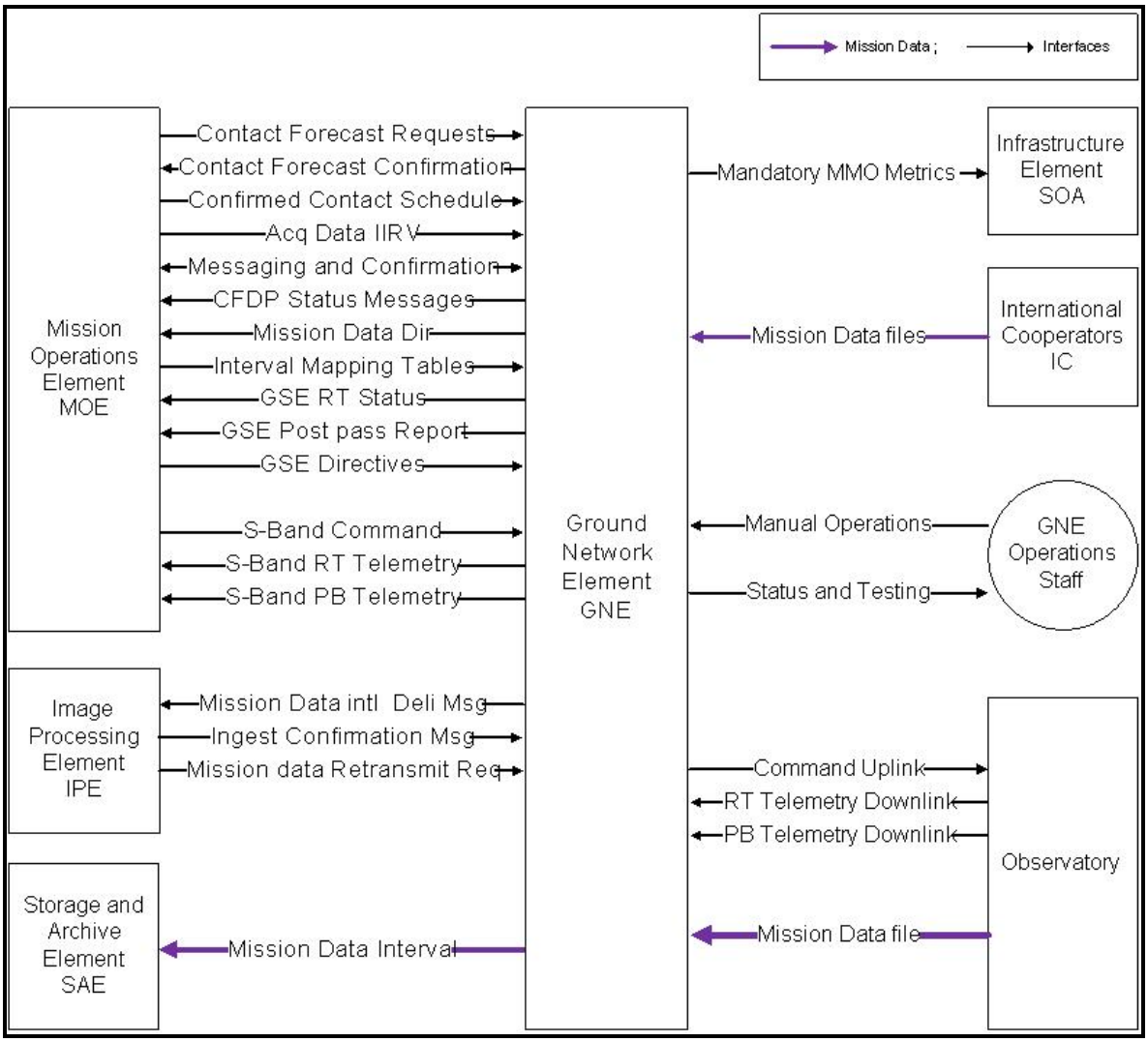

Figure 3-9. GNE Interface Contextual Diagram

The section covers the brief description of these interfaces with the external and internal elements of the LDCM mission.

3.5.1 MOE Interface Connections

The connections between the MOE and the GNE are directly related to scheduling, status, telemetry and command transfers.

1. Telemetry Downlink: The telemetry data is received from the observatory at the ground station and routed to the MOE for processing.

2. Command uplink: The encryption command stream is received from the MOE by the ground station and uplinked to the observatory.

3. The status and control interface connection may encompass several individual connections to the MOE. The status portion will report back status information

for live pass events to the MOE for monitoring and trending. The control portion will allow some minimal level of control of the ground station by the MOE during a pass event.

4. The LGN stations will generate status message for each individual mission data file it receives from the observatory. This status message will allow MOE to accommodate the retransmit commands in its command loads.

5. The MOE initiates scheduling by sending the schedule forecast request to the GNE. The MOE receives a forecast confirmation from GNE based on which MOE finally sends a confirmed schedule back to the GNE.

3.5.2 IPE Interface Connections

The IPE receives messages from the GNE referencing mission intervals that have been delivered by the GNE to the SAE storage facility. Once the IPE has successfully ingested a given mission interval the IPE will message the GNE of the successful ingestion of the mission interval and also it will send retransmit requests through the same interface.

3.5.3 SAE Interface Connections

The GNE will deliver mission completed intervals to the SAE storage facility. The GNE will utilize a direct connection to the SAE storage facility for this interface.

3.5.4 Observatory Interface Connections

The GNE will interface to the observatory utilizing three connections: X-Band mission receive channels; S-Band telemetry receive channels; and S-Band telemetry transmit channels. The X-Band mission will be multiple receive only RF links in which CFDP files are sent from the observatory to any of the LGN ground stations. The GNE will provide the RF interface for S-Band between the MOE and the observatory utilizing a coherent uplink/downlink S-Band path to the observatory.

3.5.5 GNE Operations Interface

The GNE operations interface will include all manual operations and status messaging. The equipments in the ground station will have manual controls in case of automation failures or limitations. The local operators will allow direct human communication between the elements as well to identify problems, solutions, augmentation, and expansion.

3.5.6 Infrastructure Element (IE) Interfaces

The infrastructure element is a complex messaging system connected to all segments of the LDCM mission. The IE includes the messaging systems and the central repository. The GNE will routinely retrieve and place files on the central repository. The GNE will routinely send and receive messages from the IE.

Section 4 Operations, Staffing, and Phases

The Operations, Staffing and Phases section will outline the operational description, policies and constraints and transition phases.

4.1 GNE Operations

The GNE shall provide a similar approach to the DCPF operations environment but with reduced staff and overhead. The GNE will accomplish its goal by developing and utilizing a series of automation tools for the ground station operations team. The GNE operations and staffing philosophies are described in further detail in the following sections.

4.1.1 Scheduler

The GNE scheduler operates monitors and controls the Scheduling and Reporting System (SRS) for the GNE. The scheduler ensures the correct and timely completion of the scheduling forecast request by the MOE. The scheduler ensures all LAC systems are receiving the correct schedules. The scheduler also ensures the MOE is receiving the correct reports from the LGN stations.

4.1.2 Routing and Collection

The routing and collection operation team monitors and controls the DCRS for the GNE. The operations team ensures that the DCRS is properly collecting and routing data.

4.1.3 Remote LGN

The GNE remote LGN ground station operations will be procured via a services contract. It is presumed that the vendor will have their own support. For the purpose of this document it is presumed that the remote LGN will be a Polar facility or PGS and it will have staff functionally equivalent to the DCF Operations Lead and Ground Station Engineer.

4.2 Operational policies and constraints

The operational policies and constraints will cover the current and potential future policies and constraints for the GNE.

4.2.1 Training

Training will be provided by the development staff for any subsystems developed by the USGS. For COTS products, training will be provided by the vendor as required.

4.3 GNE Transition Phases

The transition to operations will encompass a large section of time beginning with the refurbishment of the 10m antenna and ground station to the hand over of normal operations after On-orbit Initialization and Verification (OIV). Each section below will briefly surmise the transition impacts.

4.3.1 Transition from Landsat Operations

The transition from the Landsat 5 and Landsat 7 operations to the GNE will begin with the augmentation of the 5m antenna system and ground station. The augmentation will allow the Landsat 5 and 7missions to seamlessly move to the 5m antenna system without impacting either mission. Once the 5m antenna system upgrades have been completed the Landsat missions will begin to transition to the 5m systems and certify them for continuing operations.

The 10m antenna and ground station will begin its augmentation when the Landsat 5 and 7 missions have successfully transitioned to the 5m ground station. The 10m ground station will have some level of refurbishment completed allowing it to support the LDCM mission. Once this refurbishment and/or upgrades to the 10m are completed, it will transition to the GNE operations environment. The GNE operations environment will prepare the LGN station for the pre-launch, launch, OIV and normal operations.

4.3.2 Prelaunch Operations

Pre-launch operations transition will be a seamless convergence of the ground station into the pre-launch testing and system deployment/development. The pre-launch phase will allow the GNE to begin staffing the operations positions described in the operations sections of the operations concept. The pre-launch testing will conclude with the GRT and the MRT leading into the pre-launch ground station freeze period.

4.3.3 OIV

Transitioning from the pre-launch ground station freeze through the launch phase, will begin the OIV period. The OIV period will begin from launch day continuing until all OIV testing has been completed. The OIV period will be controlled by the MOE personnel at GSFC. Additional staff may be required to support the launch and OIV periods due to the increased criticality of the time period.

4.3.4 Normal Operations

Transition to normal operations from the OIV period will occur directly at the ending of the OIV period. The normal operations will occur when the entire system, from observatory to ground station, has been tested and considered operational. The normal scheduling of staff, events, passes, mission data and testing will begin during the normal operations phase. All scheduling of staff, events, passes, mission data and testing will be included in the SOP for the operations staff.

Section 5 Element Level Operational Scenarios

This section describes the various operational scenarios of the LDCM mission where GNE participates as a functional and operational entity. Each scenario will have a brief description, one or more drawings and finally the description of the step by step operation events illustrated in the drawings. Several of the scenarios will refer to another scenario to avoid the repeated presentation of the same scenario.

Figure 5-1 shows the GNE functional architecture and its interaction to the MOE, DPAS and Observatory.

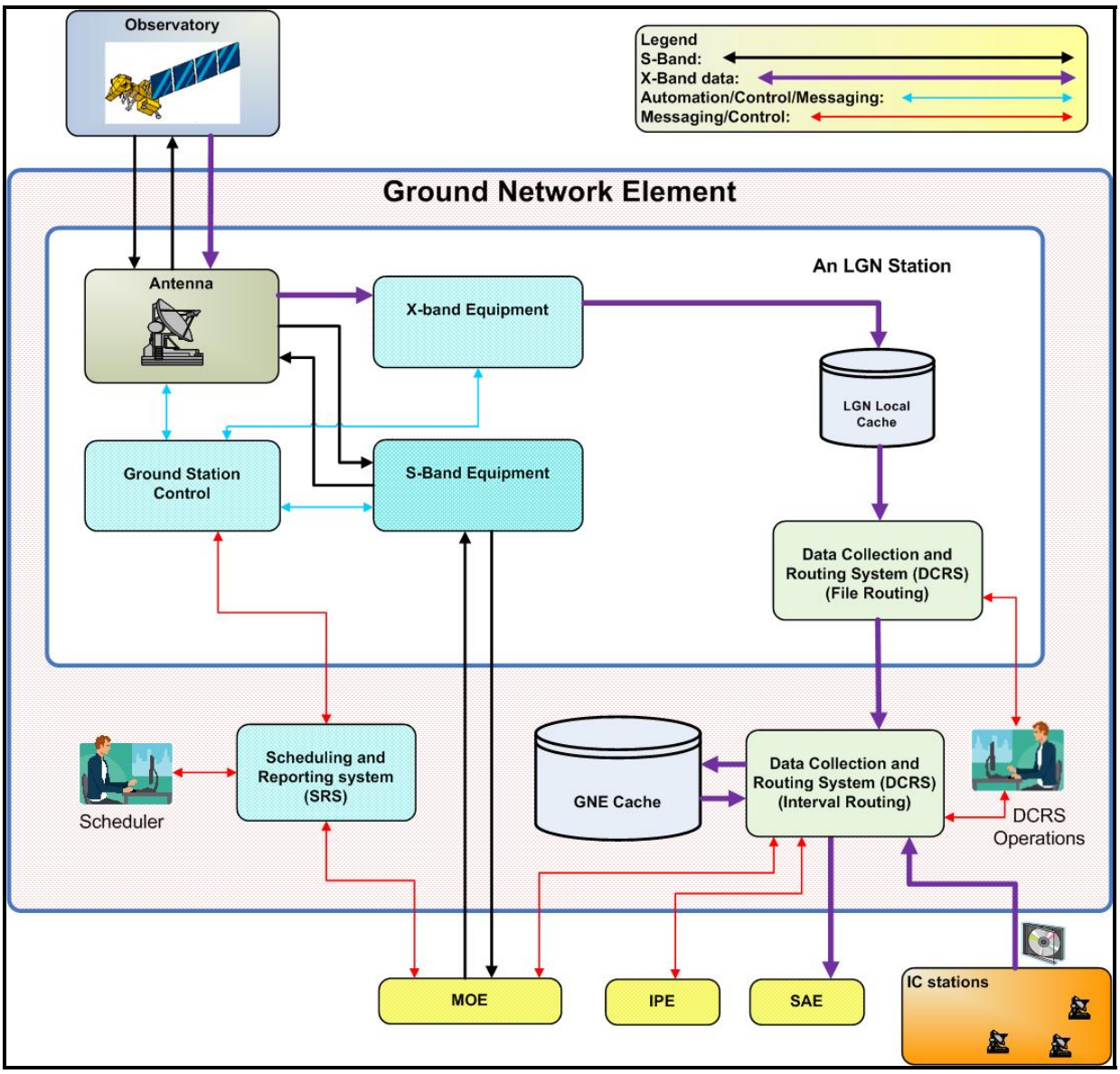

Figure 5-1. GNE Functional Architecture and Interaction

5.1 X-Band Mission File Acquisition Scenarios

The GNE will capture and temporarily store the mission files from the observatory as outlined in the Section 2 of this document. The following scenarios will portray the most common capture and storage scenarios.

5.1.1 LGN Mission Data Capture scenario

The remote LGN X-Band data capture process will be nearly identical to the local LGN station capture process. The difference would be the interaction of the remote DCRS with the local DCRS for file transfers. The path is shown in red to outline the difference from the nominal local path with the nominal remote path. Only the red path will be described below in the descriptions.

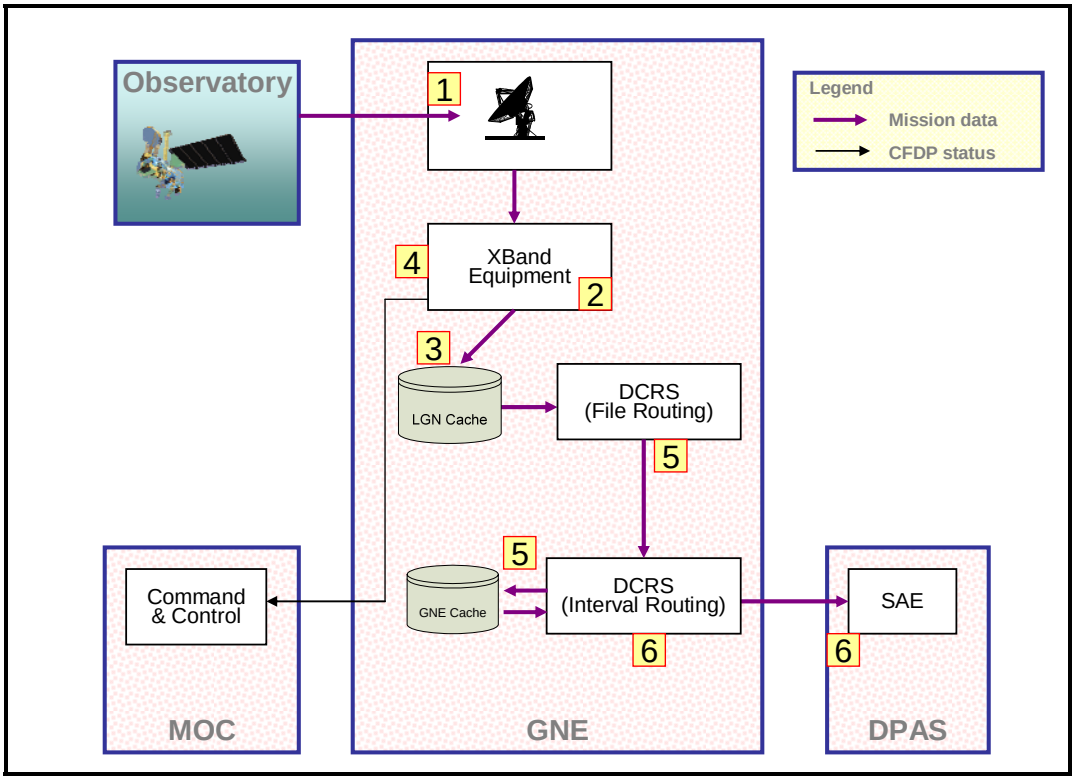

Figure 5-2. LGN X-Band Data Capture

Step	Title	Description
1	X-Band AOS	X-Band signal acquisition begins when the observatory turns on the X-Band signal. The antenna system acquires the signal and processes the downlink
2	X-Band processing	The X-Band data is demodulated and bit synchronized into a digital data stream ready for capture
3	Data captured	The mission data files are captured to disk for temporary storage

4	CFDP status message to MOE	The X-Band Equipment generates the successful reception of the mission data file that are sent to the MOE
5	Data to DCRS at Primary LGN	The DCRS (File routing) at remote LGN will route the mission data files to the DCRS at primary LGN
6	Data to DPAS	Once a set of mission data files that make an interval has been satisfied on the GNE cache it is transferred to the DPAS for processing and permanent storage

5.1.2 Mission data Capture Scenario at LGN EDC (TBD)

The Mission data acquisition scenario starts at the reception of the mission data in the X-band by the LGN station followed by routing through the XRS, local storage in the GNE cache and finally passes to the DPAS through the DCRS. Also includes the capture success of the expected files to the MOE.

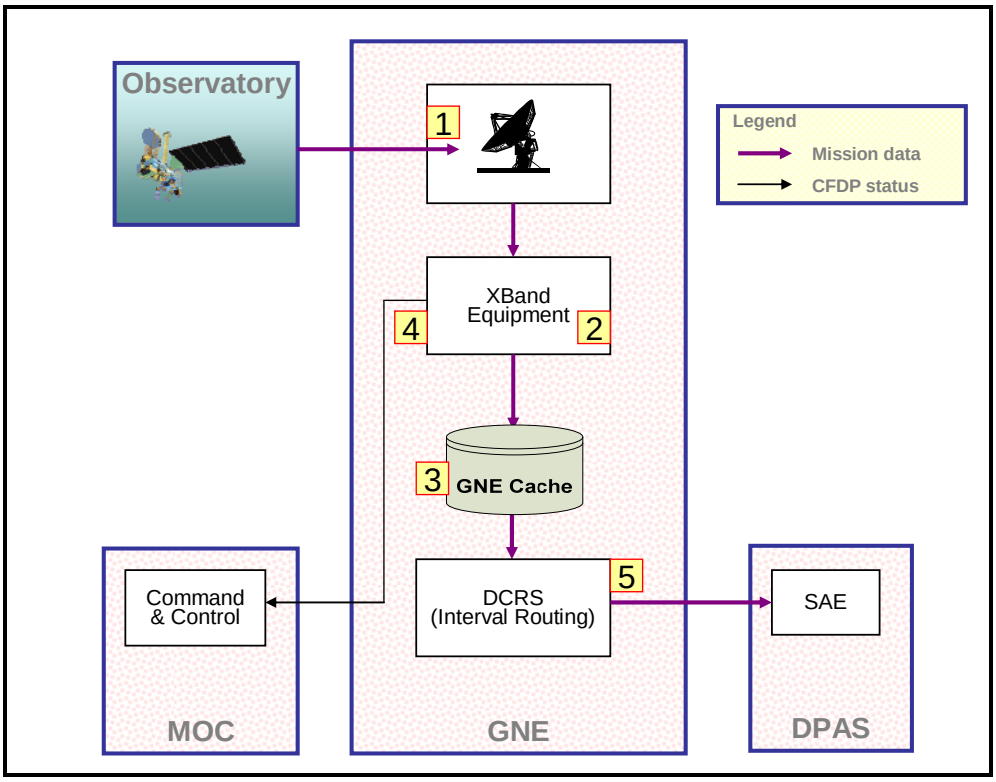

Figure 5-3. X-Band Mission Capture at EROS

Step	Title	Description
1	X-Band AOS	X-Band signal acquisition begins when the observatory turns on the X-Band signal. The antenna system acquires the signal and processes the downlink
2	X-Band processing	The X-Band data is demodulated and bit synchronized into a digital data stream ready for capture
3	Data captured	The mission files are captured to disk for temporary storage
4	CFDP status message to MOE	The X-Band Equipment generates the successful reception of the mission data file that are sent to the MOE
5	Data to DPAS	Once a mission interval has been satisfied on the GNE cache it is transferred to the DPAS for permanent storage and processing by the DCRS.

5.1.3 CFDP Status Messaging Scenario

The CFDP protocol allows for the assessment of the success of data reception for each mission data file. X band Equipment of each ground station will generate the status message and routed to the MOE in real time. MOE will process the status packet and command the observatory for the possible retransmission of unsuccessful files either within the same pass event or in the next possible pass event. Observatory will process the resend request commands and will transmit the data to the LGN in the next available opportunity. The data capture portion of the retransmits would be identical to the nominal X-Band mission data capture shown in Figure above.

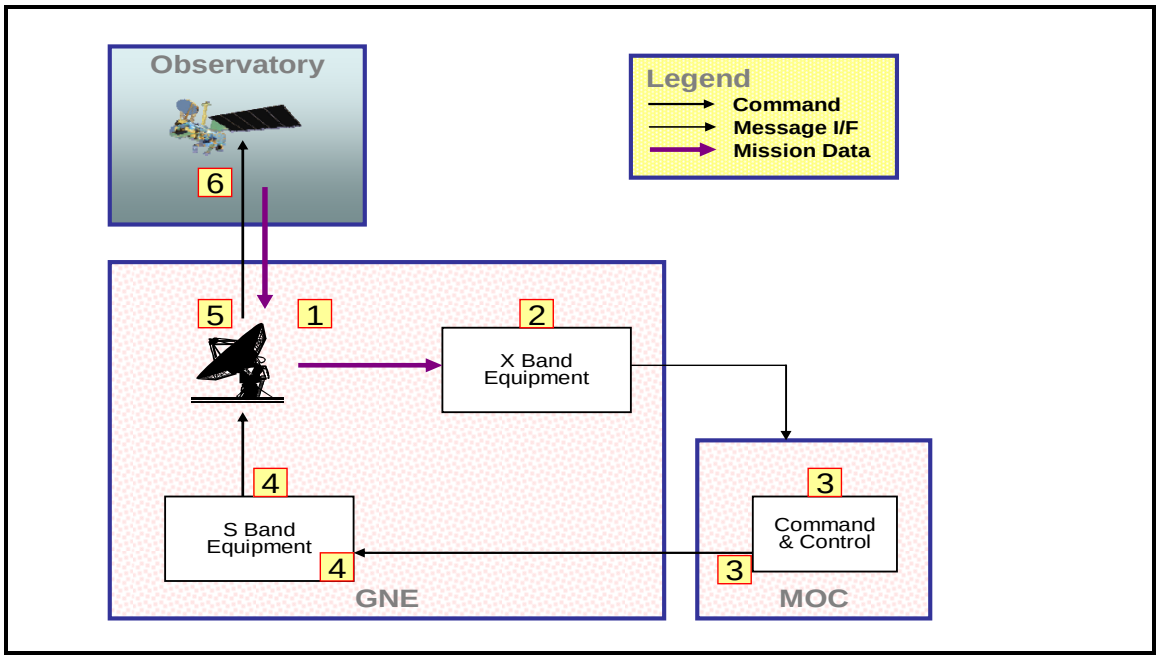

Figure 5-4. CFDP status messaging scenario

Step	Title	Description
1	X-Band AOS	X-Band signal acquisition begins when the observatory turns on the X-Band signal. The antenna system acquires the signal and processes the downlink
2	X-Band processing	The X-Band data is processed and the CFDP message is generated and routed to the MOE for each mission data file in real time
3	MOE receives message	The MOE processes the message and updates the retransmit request in the command load for the unsuccessful mission data file and schedules it either within the same pass event or in the next available pass event
4	Command transfer	The command uplink is received by the GNE S-band Equipment and the S-band RF signal is routed to the antenna
5	Command uplink	The command is transmitted to the observatory via the available LGN station
6	Observatory	The observatory processes the retransmit command and retransmits the data in the next available opportunity

The actual timeline of the transfer of the CFDP status message and the follow on file retransmit is shown in Figure 5-5. The figure illustrates a candidate corrupt file (file #15

highlighted in red) showing the outcome of this feedback in the possible timeline needed to complete the retransmit of the candidate corrupt file.

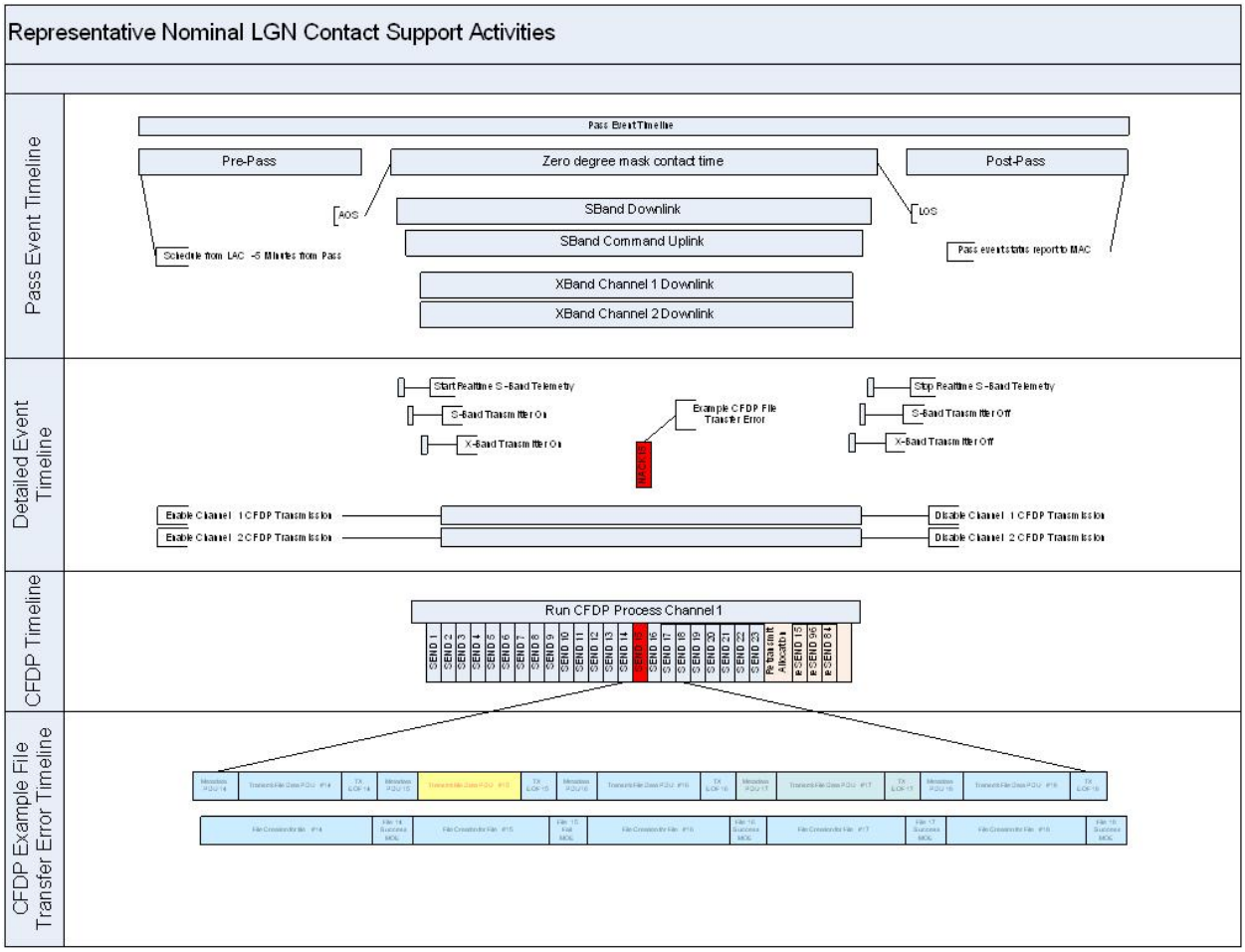

Figure 5-5. CFDP File Transfer Timeline

5.2 Mission Data Transfer to DPAS

The mission data is transferred to the DPAS in three possible scenarios which include nominal transfer, transfer in response to the manual/automated retransfer requests. All scenarios will assume that the data is captured and stored on the local LGN cache and populated in the DCRS database.

5.2.1 Nominal Mission Data Transfer to the DPAS

The MOE will provide the list of mission data files that form an interval (interval mapping table) to the DCRS (Interval Routing). The DCRS will look for the mission data files in the GNE cache that forms an interval as defined by MOE. Upon the satisfactory verification of the completion of an interval the DCRS will copy and transfer those mission data files to the SAE cache. The DCRS will also send a message to the IPE regarding the delivery of the data to the SAE.

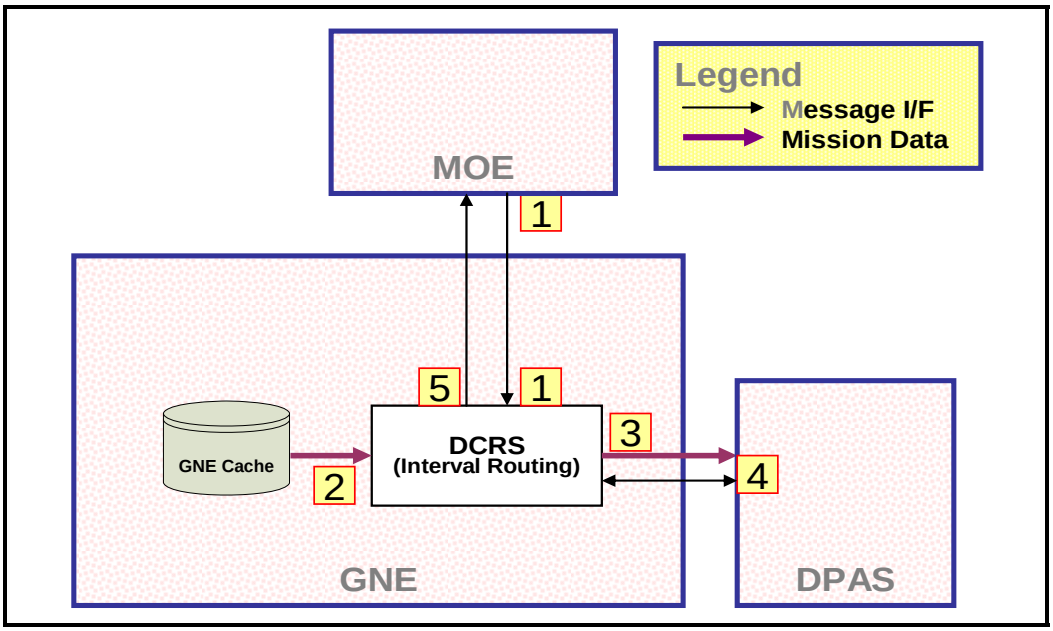

Figure 5-6. Nominal Mission Data Transfer to DPAS

Step	Title	Description
1	MOE generates list	The MOE generates and sends the interval mapping table to the DCRS (Interval routing). DCRS looks on the GNE cache at the mission data files to make up an interval as defined in the interval mapping table
2	File from cache	The DCRS retrieves all the mission data files that satisfies an interval
3	Interval transferred	The DCRS generates the meta data for the intervals and packs it along with the interval data and transfer to the DPAS as well as sends a message to the DPAS
4	DPAS ingests	The DPAS receives and ingests the mission data intervals and sends a message in confirmation of the successful ingest to the GNE.
5	DCRS manages GNE storage	With the ingest confirmation message from the DPAS the DCRS will mark the files that can be deleted from GNE storage and also send a message to MOE of the successful ingest of the interval.

5.2.2 DPAS Retransfer Requests of Mission Data Files

The DPAS will have the ability to request files to be transferred or re-transferred to the DPAS from the GNE DCRS. This scenario covers the automatic and manual request scenarios. The DPAS requests are unknown and could be generated by an automated system or an operator.

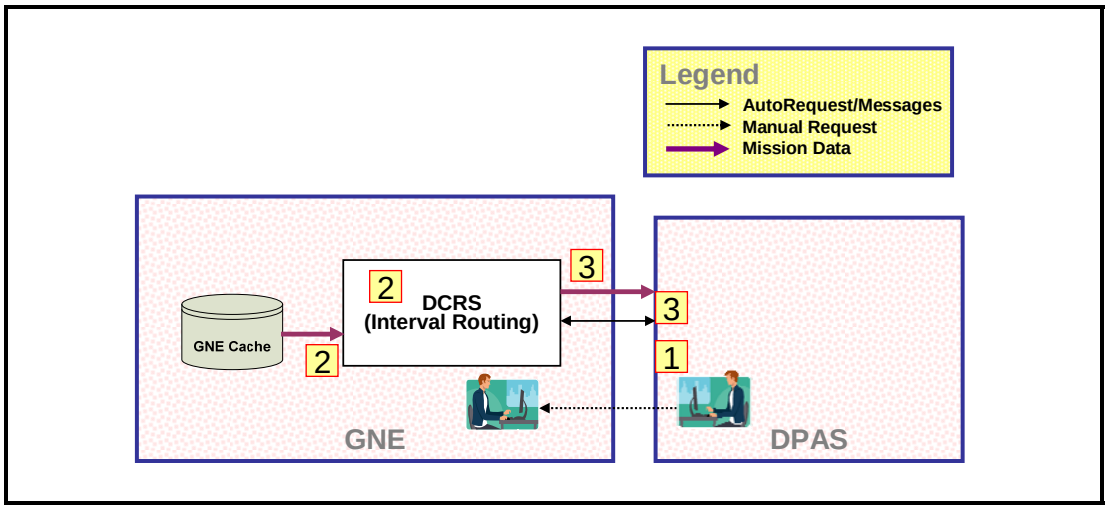

Figure 5-7. DPAS Request File Transfer

Step	Title	Description
1	DPAS requests retransfer	The DPAS requests for retransfer of mission data files from the GNE either automatically or manually
2	DCRS processes	The DCRS retrieves the requested files from GNE cache, also creates the metadata for the requested files and packs it along with the mission data files
3	DPAS confirmation	The DCRS transfers the file to the DPAS in the same manner as nominal mission intervals are transferred. DPAS acknowledges the receipt of the files to the GNE.

5.3 S-Band Telemetry Services Scenarios

The S-Band telemetry services include the reception and processing of the RF telemetry signal, the transmission of the RF command signal and routing these signals between the observatory and the MOE. The S-Band services operational scenarios presented below are the most nominal set of scenarios.

5.3.1 Nominal S-Band Support Scenario

The nominal S-Band support will begin with the AOS of the S-Band signal from the observatory. The S-Band Equipment will process the RF signal and output a digital data telemetry stream to the MOE. The MOE will generate the uplink digital command

stream and route to the GNE S-Band Equiment. The command stream will be modulated and upconverted into an RF signal and uplinked to the observatory by the LGN station antenna system. All the LGN stations will provide the same S-Band service with similar performance levels.

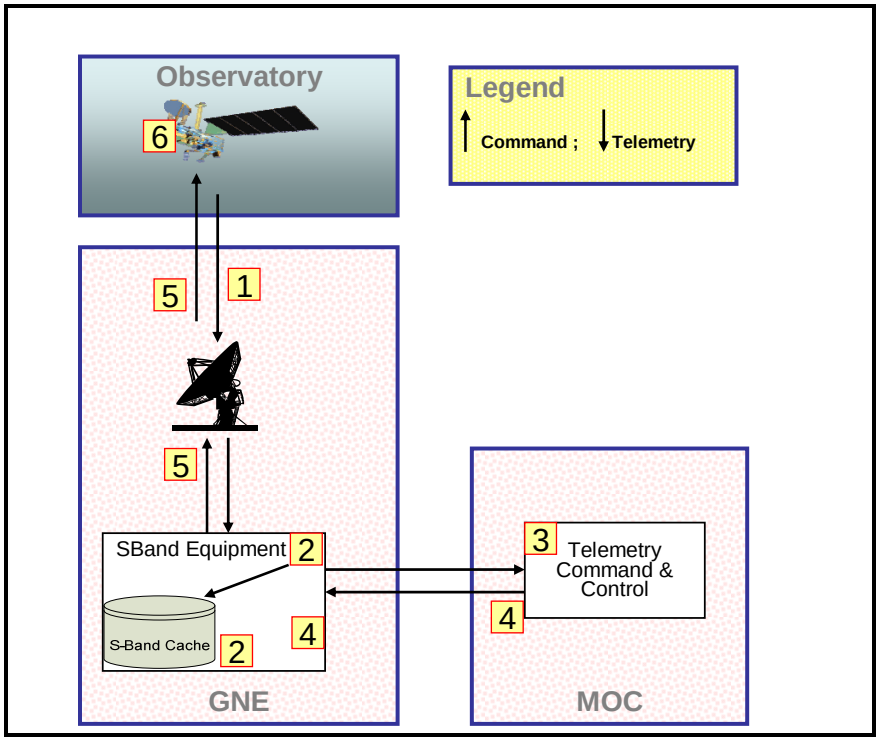

Figure 5-8. Nominal S-Band Acquisition and Processing

Step	Title	Description
1	S-Band RF AOS	S-Band signal acquisition begins as satellite comes over horizon and begins transmitting the telemetry to the ground station
2	S-Band processing	The S-Band signal is demodulated and bit synchronized and the subsequent digital data telemetry stream is routed to the MOE and also concurrently stored in S-band cache
3	MOE telemetry processing	The MOE receives the telemetry stream, processes generates commands and command loads in a digital data stream
4	Command RF uplink	The MOE forwards the command loads to the GNE S-Band Equipment which modulates and upconverts that to an RF signal to be uplinked
5	Transmit	The command RF signal is transmitted to the observatory via the LGN station antenna

5.3.2 Telemetry File Playback to MOE

The GNE will store the telemetry files in an internal cache in the S-band system for a TBD length of time. The MOE will have the ability to request a telemetry file to be played back from the GNE S-band system cache. The operation begins with the MOE contacting the GNE operations staff and requesting a file playback. The operations staff member will log into the S-Band Equipment or utilize the local automation controller, to initiate a file playback to the MOE. Once the MOE request has been fulfilled the MOE will notify the GNE operations staff member of the status.

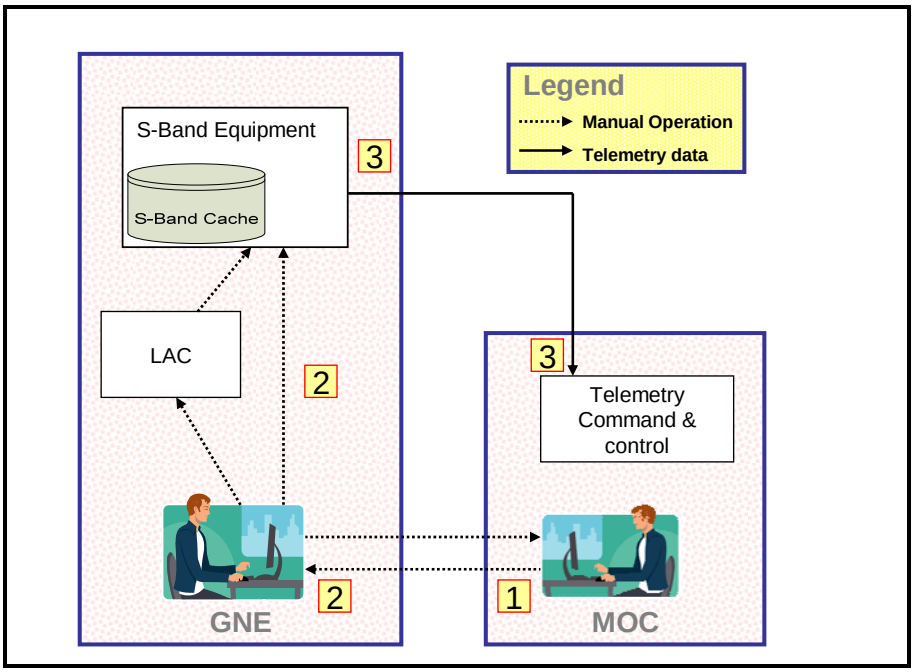

Figure 5-9. Telemetry File Playback to MOE

Step	Title	Description
1	MOE (FOT) initiates request	The MOE (FOT) send requests for the TM file playback to the GNE operator
2	GNE operator initiates transfer	The GNE operator either manually or utilizing the SRS & LAC access the S-Band Equipment to transfer the requested file to MOE
3	MOE receives	The S-Band Equipment transfers the file to the MOE receives and verifies.

5.4 LGN Scheduling Scenarios

The Scheduling and Routing System (SRS) is the master scheduler for all the LGNs. The SRS will forward the contact schedules to the Ground Station Control of each LGN stations. All the status and event messaging back to the MOE will be coordinated by the SRS. A sample scheduling timeline is illustrated in Figure 5-10.

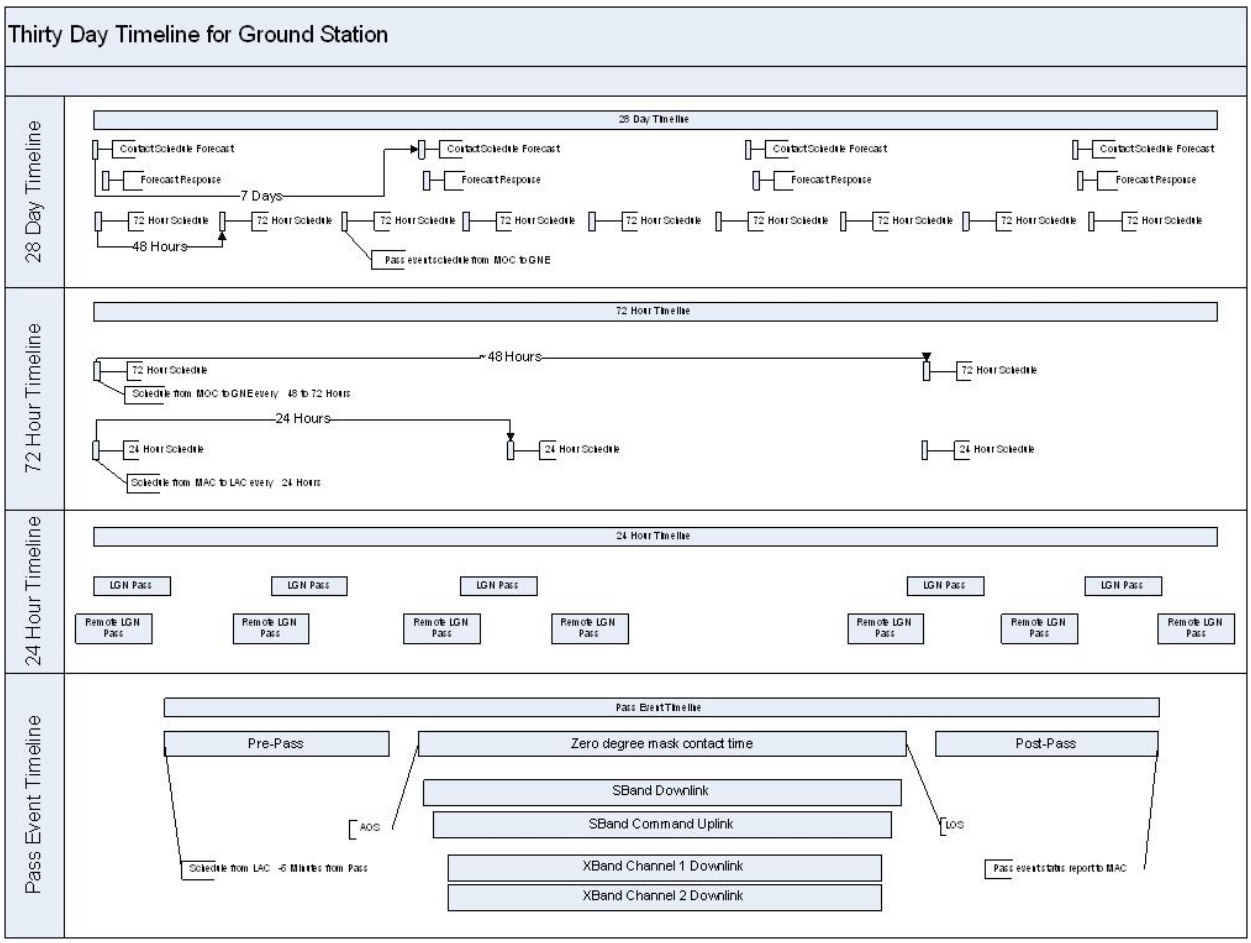

Figure 5-10. Sample Scheduling Timeline

5.4.1 Contact Forecast Request and Response scenario

The MOE will request a contact schedule forecast to assess the GNE resource scenario on a weekly basis. The GNE sends back the forecast with potential resources that will be utilized for each event that will allow the MOE to assess the pass events and the contact schedule for each LGN station. MOE utilizing all the information will finally bring out the confirmed contact schedule for all the LGNs. This process can either be manual or automated. The following diagram shows the nominal process for the forecast modeling.

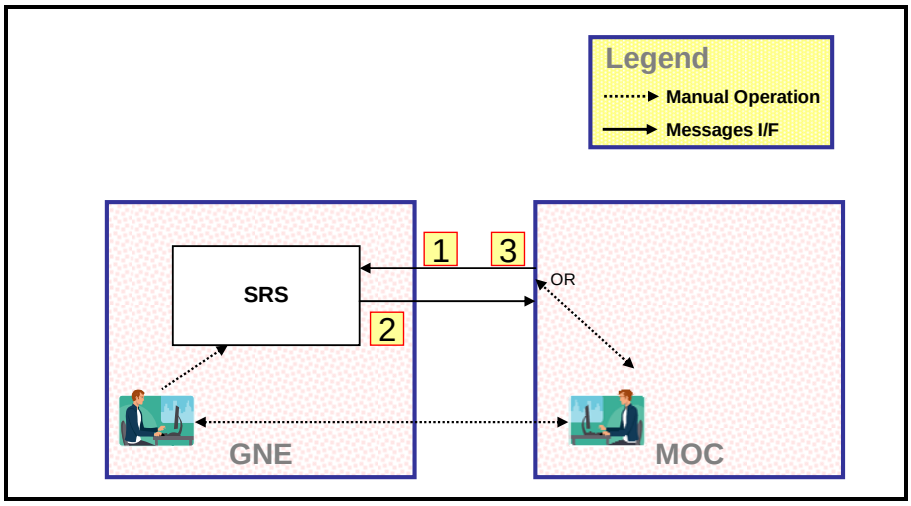

Figure 5-11. Contact Forecast Request and Response

Step	Title	Description
1	MOE request	The MOE sends a request for contact schedule forecast to the GNE SRS
2	SRS processing and confirmation	The SRS receives the forecast model schedule and after processing responds with the forecast confirmations back to the MOE
3	MOE's confirmed contact schedule	MOE finally integrates all the information, compiles the final confirmed contact schedule and sends to GNE for actual scheduling

5.4.2 Station Scheduling

The SRS upon receipt of the confirmed contact schedule from the MOE will break down that to individual LGN station specific contact schedules and distribute to the ground station control of each of the LGN stations. This scenario presents the nominal contact scheduling process. The acquisition data IIRV is received from the MOE and processed by the SRS in an identical manner hence both the scenarios are represented in the Figure 5-12.

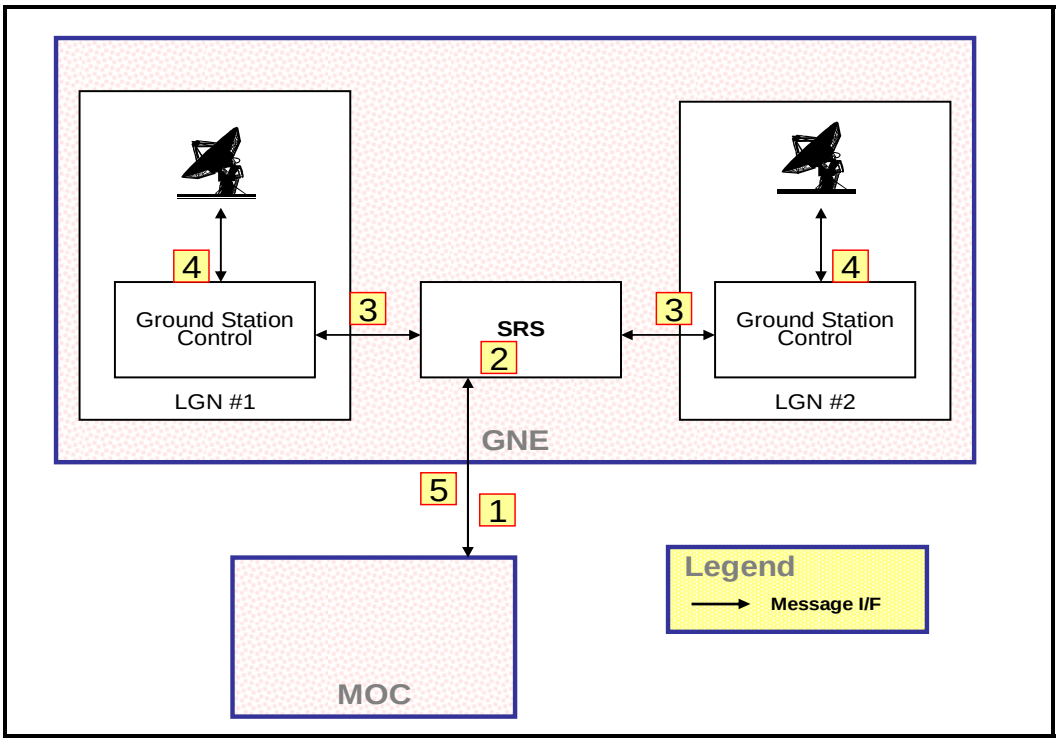

Figure 5-12. LGN Scheduling

Step	Title	Description
1	MOE generates schedule	The MOE will generate the contact schedule based on the forecast schedule confirmation from GNE
2	SRS receives and processes	The SRS will receive the confirmed contact schedule and breaks it into a station specific contact schedules of events and parses for each LGN station
3	SRS schedules LGN	The SRS will provide the Ground Station Control of each LGN stations with the station specific schedule
4	Ground station Control processes	The Ground Station Control will prepare all the station resource as per the schedule from SRS
5	SRS reports to MOE	The SRS reports any errors and/or conflicts in

		the scheduling back to the MOE

5.4.3 Status Reporting

The GNE will collect the status from all the LGN station equipments and systems specifically outlined for a pass event and report to the MOE as pass event status report. The pass event status reporting scenario is illustrated in Figure 5-13.

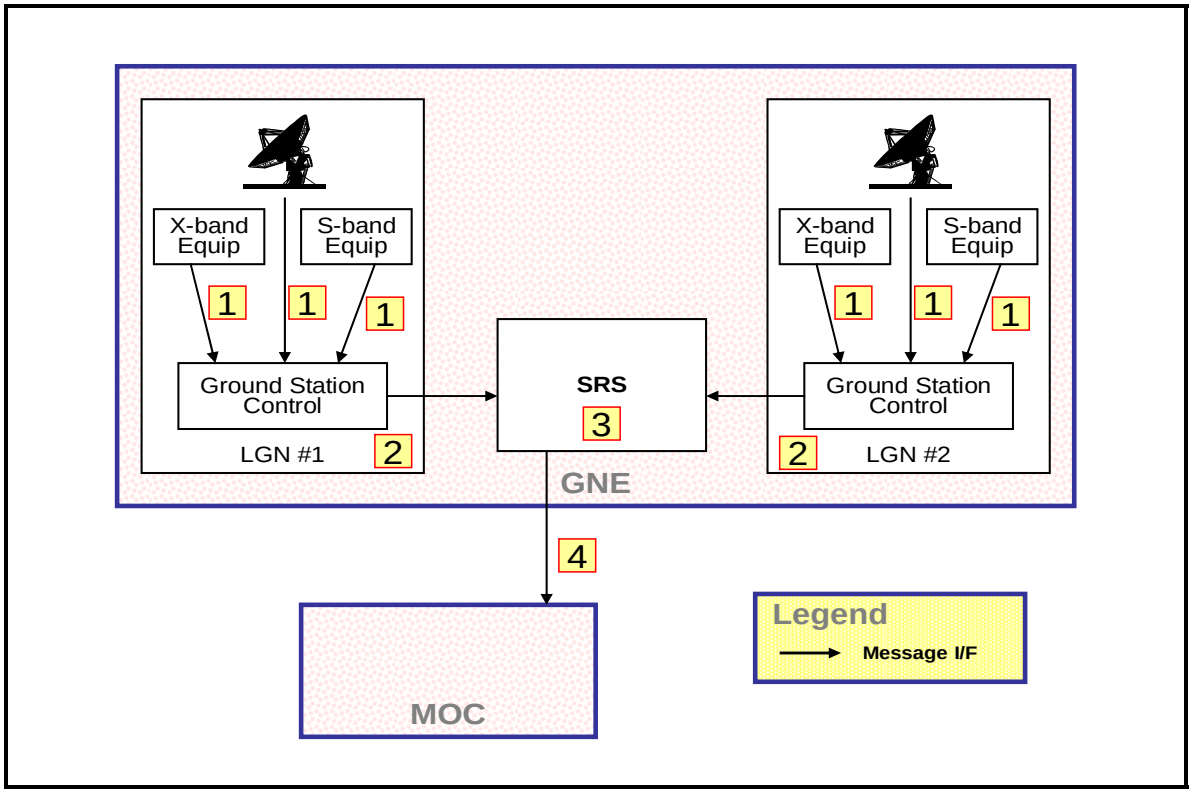

Figure 5-13. Pass Event Status Reporting

Step	Title	Description
1	Pass Event Status	All the LGN station equipments generate event status information and forward to Ground Station Control
2	Ground station Control Processes	The Ground station Control collects and processes all information creating a station master status report to include its own status information and sends to the SRS
3	SRS processes	The SRS processes the status report from the all the LGN and adds any other SRS specific information as needed and forwards to the MOE for further processing

Appendix A Acronyms

Acronym	Description
bMOE	backup Mission Operations Element
bps	bits per second
BPSK	Band Phase Shift Keying
BPSK	Binary Phase Shift Keyed
CCSDS	Consultative Committee for Space Data Systems
CFDP	CCSDS File Delivery Protocol
CONUS	CONterminous United States
COTS	Commercial Off The Shelf
dB/K	Decibel /Kelvin
dBW	Decibel Watt
DCRS	Data Collection and Routing System
DCRS (FR)	Data Collection and Routing System (File Routing)
DCRS (IR)	Data Collection and Routing System (Interval Routing)
DFCB	Data Format Control Book
DPAS	Data Processing and Archive Segment
EIRP	Effective Isotropic Radiated Power
EROS	Earth Resources Observation and Science
FD	Flight Dynamics
FOT	Flight Operations Team
G/T	Gain Vs system thermal noise Temperature dB/K
GN	Ground Network
GNE	Ground Network Element
GRT	Ground Readiness Test
GSC	Ground Station Control
GSE	Ground Station Equipment
GSRD	Ground System Requirements Document
I&T	Intergration & Testing
IC	International Cooperators
ICD	Interface Control Document
IIRV	Improved Inter-Range Vector
IPE	Image Processing Element
IPE IS	IPE Ingest Subsystem
IT	Information Technology
Kbps	Kilo bits per second
LGN	LDCM Ground Network
LHCP	Left Hand Circular Polarization
Mbps	Mega bits per second
MHz	Mega Hertz
MOC	Mission Operations Center

MOE	Mission Operations Element
MOERD	Mission Operations Element Requirements Document
OIRD	Observatory Interface Requirements Document
RF	Radio Frequency
RHCP	Right Hand Circular Polarization
RS	Reed Solomon
RSDO	Rapid Spacecraft Development Office
SAE	Storage and Archive Element
SN	Space Network
SRS	Scheduling and Reporting System
SSR	Solid State Recorder
TBC	To Be Confirmed
TBD	To Be Defined
TBR	To Be Reviewed
TDRSS	Tracking Data Relay Satellite System
TLE	Two Line Element
UPE	User Portal Element
USGS	U.S. Geological Survey

References

USGS/EROS. LDCM-OCD-002. LDCM Ground Systems Operations Concept Document.

USGS/EROS. LDCM-REQ-011. Ground Systems Requirements Document (GSRD).

USGS/EROS. LDCM-REQ-001. Ground Systems Interface (GSI) Requirements Document.

USGS/EROS. xxxx-xxx-xxx. LDCM Science and Mission Requirements Document.

USGS/EROS. xxxx-xxx-xxx. Mission Operations Element Requirements Document.

USGS/EROS. xxxx-xxx-xxx. Observatory Interface Requirements Document