DRAFT

L9-02-02
LANDSAT 9 PROJECT

MISSION OPERATIONS CONCEPT DOCUMENT

National Aeronautics and Space Administration

Goddard Space Flight Center
Greenbelt, Maryland

CHECK WITH LANDSAT 9 DATABASE AT:
https://<TBD>
TO VERIFY THAT THIS IS THE CORRECT VERSION PRIOR TO USE.

Use or disclosure of data contained on this page is subject to the restriction(s) on the title page of this document.

MISSION OPERATIONS CONCEPT DOCUMENT

Signature/Approval Page

Prepared by:

Jason Williams Landsat 9 Mission Systems Engineer U.S. Geological Survey	Date

Approved by:

Del T. Jenstrom Landsat 9 Project Manager NASA/GSFC, Code 420	Date

CM FOREWORD

This document is a Landsat 9 (L9) Project Configuration Management (CM)-controlled document. Changes to this document require prior approval of the applicable Configuration Control Board (CCB) Chairperson or designee. Proposed changes shall be submitted to the L9 CM Office (CMO), along with supportive material justifying the proposed change. Changes to this document will be made by complete revision.

Questions or comments concerning this document should be addressed to:

NASA/Goddard Space Flight Center
Landsat 9 Project Office, Code 429
Attention: Configuration Management Office
Greenbelt, Maryland 20771

Change History Log

Revision Level	**Effective Date**	**Description of Changes** (Reference the CCR & CCB/ERB Approval Date)
Rev -		Released per L9-CCR-<Entered by CMO>

List of TBDs/TBRs

Item No.	Location	Summary	Ind. Name/Org.	Due Date
1	Cover Page	Check with Landsat 9 database at: https:// (TBD)		
2	Table 1-1	Related documents (TBD)		
3	3.1.1.4, 3.1.1.5, 6.1.3.1.1	750 (TBR) individual scenes		
4	3.2.1.2	The GNE has the potential to add three additional LGN stations (TBR) and S-Band capabilities (TBR)		
5	3.2.2.1	LTAP-9 may incorporate historical cloud fraction climatology and cloud cover predictions (TBR)		
6	3.2.2.4, Table 6.11	bMOC handover and operational times (TBR)		
7	3.3.1	Launch Vehicle will be (TBD)		
8	Table 5-1	Prelaunch Site Activities (TBD)		

Table of Contents

1.0 INTRODUCTION 1
1.1 Purpose 1
1.2 Scope 1
1.3 Background 1
1.4 L9 Mission Objectives 2
1.5 Roles and Responsibilities 2
1.6 Documentation Organization 3
1.7 Related Documentation 3

2.0 SYSTEM CONCEPT 3
2.1 Space Segment 4
2.2 Ground System (GS) 5
2.2.1 Ground Network Element (GNE) 5
2.2.2 Mission Operations Center (MOC) 6
2.2.3 Data Processing and Archive System (DPAS) 6
2.3 Launch Services Segment (LSS) 6
2.4 L9 External System Interfaces 6
2.4.1 NASA Space Network (SN) 6
2.4.2 NASA Near Earth Network (NEN) 7
2.4.3 NASA Integrated Service Network (NISN) 7
2.4.4 NASA GSFC Flight Dynamics Analysis 7
2.4.5 GSFC Space System Protection Mission Support Office (SSP-MSO) 7
2.4.6 Earth Science Mission Operations (ESMO) 7
2.4.6.1 Constellation Coordination System (CCS) 8
2.4.7 Flight Software Vendors 8
2.4.8 External Data Sources 8
2.4.8.1 National Center for Environment Predictions (NCEP) 8
2.4.8.2 US Naval Observatory (USNO) 8
2.4.9 International Cooperators (ICs) Interface 8
2.5 Primary System Users 9
2.5.1 User Community 9
2.5.2 GNE Operators 9
2.5.3 Flight Operations Team (FOT) 9
2.5.4 DPAS Operators 9
2.5.5 Data Acquisition Manager (DAM) 9
2.5.6 Mission Management Officer (MMO) 9
2.5.7 Landsat Science Team (LST) 10
2.5.8 Calibration / Validation Team (CVT) 10

3.0 FUNCTIONAL VIEW OF OPERATION CONCEPT 11
3.1 Space Segment 11
3.1.1 Observatory 11
3.1.1.1 Communications, Command and Data Handling 12

CHECK WITH LANDSAT 9 DATABASE AT:
https://<TBD>
TO VERIFY THAT THIS IS THE CORRECT VERSION PRIOR TO USE.
Use or disclosure of data contained on this page is subject to the restriction(s) on the title page of this document.

3.1.1.2 Health and Safety Maintenance 12
3.1.1.3 Attitude / Orbit Determination and Control 12
3.1.1.4 Image Collection 12
3.1.1.5 Data Storage and Downlink 13
3.1.1.6 Data Management 13
3.1.2 Spacecraft / Observatory Simulator (SOS) 14
3.1.3 Space Segment Ground Support Equipment (GSE) 15
3.2 L9 Ground System (GS) 15
3.2.1 Ground Network Element (GNE) 15
3.2.2 Mission Operations Center (MOC) 16
3.2.2.1 L9 Long-Term Acquisition Plan (LTAP-9) 17
3.2.2.2 Image Collection Scheduling 18
3.2.2.3 MOC Interface to Spacecraft / Observatory Simulator (SOS) 18
3.2.2.4 Backup MOC (bMOC) 19
3.2.3 Data Processing and Archive System (DPAS) 19
3.3 Launch Services Segment 20
3.3.1 Launch Vehicle (LV) 20
3.3.2 Launch Vehicle Ground Support Equipment (LV-GSE) 21

4.0 LOGISTICS SUPPORT AND SUSTAINING ENGINEERING 22
4.1 Logistics Support 22
4.1.1 Facilities 22
4.1.2 Security 22
4.1.3 Training 22
4.1.4 Management Support 23
4.2 Sustaining Engineering 23
4.2.1 Space Segment 23
4.2.2 Ground Network Element (GNE) 23
4.2.3 Mission Operations Center (MOC) 23
4.2.4 Data Processing and Archive System (DPAS) 24

5.0 OPERATIONS PHASES 25
5.1 Prelaunch 25
5.1.1 Prelaunch Development and Testing 25
5.1.1.1 Ground System (GS) Integration and Test (I&T) 26
5.1.1.2 L9 Mission Integration and Test 26
5.1.1.3 Observatory Integration and Test 27
5.1.2 Prelaunch Operations (L-60 to L-1 Days) 27
5.2 Launch and Early Orbit (L-24 hours to Separation) 29
5.2.1 Countdown to launch (L-24 hours to T-0) 29
5.2.2 Launch and Ascent (T-0 to ~ T+20min) 29
5.2.3 Separation 30
5.3 Observatory Commissioning (Separation to Acceptance) 30
5.3.1 Separation Sequence Execution 30
5.3.2 Initial Orbit Determination 31
5.3.3 Spacecraft Activation (Flight Day 1 – 35) 31
5.3.4 Instrument Activation (Flight Day 35 – 90) 31
5.3.5 Observatory Acceptance 32

5.4 Operations 33
5.5 Decommissioning 33

6.0 OPERATIONS SCENARIOS 34
6.1 Imaging and Calibration Operations 34
6.1.1 Description 34
6.1.2 Assumptions 34
6.1.3 Walkthrough of Intervals and Data Collection Types 34
6.1.3.1 Primary Interval (Earth Imaging) Data Collection Types 34
6.1.3.1.1 Nominal Earth Imaging Data Collection 35
6.1.3.1.2 Off Nadir Data Collection 35
6.1.3.2 Calibration Interval Data Collection Types 35
6.1.3.2.1 OLI-2 Dark Focal Plane (Shutter) Calibration 36
6.1.3.2.2 OLI-2 Extended Dark Calibration 36
6.1.3.2.3 OLI-2 Stim Lamp Calibration 36
6.1.3.2.4 OLI-2 Solar (Diffuser) Calibration 36
6.1.3.2.5 OLI-2 Linearity Calibration 37
6.1.3.2.6 Lunar Calibration 37
6.1.3.2.7 Side Slither Calibration 38
6.1.3.2.8 Stellar Calibration 38
6.1.3.2.9 TIRS-2 Normal Calibration 39
6.1.3.2.10 TIRS-2 Blackbody Temperature Sweep Calibration 39
6.1.3.2.11 TIRS-2 Integration Time Sweep Calibration 39
6.1.3.2.12 TIRS-2 Stability Calibration 39
6.1.3.2.13 TIRS-2 Transmit All Calibration 40
6.1.3.3 Test Interval Data Collection Types 40
6.1.3.3.1 SSR Test Sequence Collections 40
6.1.3.3.2 OLI-2 and TIRS-2 Test Pattern Collections 40
6.2 LGN Contact 40
6.2.1 Description 40
6.2.2 Assumptions 40
6.2.3 Walkthrough 40
6.3 Mission Data Management 41
6.3.1 Description 41
6.3.2 Assumptions 41
6.3.3 Walkthrough 42
6.4 Mission Data Retransmission 43
6.4.1 Description 43
6.4.2 Assumptions 43
6.4.3 Walkthrough 44
6.5 IC Scheduling 45
6.5.1 Description 45
6.5.2 Assumptions 45
6.5.3 Walkthrough 46
6.6 Maintain Orbit 47
6.6.1 Description 47
6.6.2 Assumptions 47

6.6.3 Walkthrough 48
6.7 Flight Software Upload 50
6.7.1 Description 50
6.7.2 Assumptions 50
6.7.3 Walkthrough 50
6.8 Communication with the Space Network (SN) 51
6.8.1 Description 51
6.8.2 Assumptions 51
6.8.3 Walkthrough 52
6.9 Monitor Health & Safety 53
6.9.1 Description 53
6.9.2 Assumptions 53
6.9.3 Walkthrough 53
6.10 Safehold/Autonomous Failsafe Occurrence and Recovery Mission 54
6.10.1 Description 54
6.10.2 Assumptions 55
6.10.3 Walkthrough 55
6.11 User Query Order and Product Distribution 56
6.11.1 Description 56
6.11.2 Assumptions 56
6.11.3 Walkthrough 56
6.12 Scene Request & Delivery 57
6.12.1 Description 57
6.12.2 Assumptions 57
6.12.3 Walkthrough 58
6.13 Backup Flight Operations 59
Appendix A Potential List of International Cooperator Ground Stations 61
Appendix B Abbreviations and Acronyms 63

List of Figures

Figure 2-1 L9 Operations Concept Architecture 4
Figure 3-1 Ground Network Element High-Level Concept View 16
Figure 3-2 Mission Operations Center High-Level Concept View 17
Figure 3-3 Data Processing and Archive System High-Level Concept View 20
Figure 6-1 Scenario Style Example 34
Figure 6-2 Lunar Calibration Slews 38
Figure 6-3 Mission Data Management 42
Figure 6-4 Mission Data Retransmission 44
Figure 6-5 IC Scheduling 46
Figure 6-6 Maintain Orbit 48
Figure 6-7 Flight Software Upload 50
Figure 6-8 Communication with the SN 52
Figure 6-9 Monitor Health & Safety 54
Figure 6-10 Safehold/Autonomous Failsafe Occurrence and Recovery Mission 55
Figure 6-11 User Query Order and Product Distribution 56

Figure 6-12 Scene Request & Delivery 58

List of Tables

Table 1-1 Related Documents 3
Table 5-1 L9 Prelaunch Site Activities (TBD – LDCM Activities Shown) 28
Table 6-1 Mission Data Management 42
Table 6-2 Mission Data Retransmission 45
Table 6-3 IC Scheduling 46
Table 6-4 Maintain Orbit 48
Table 6-5 Flight Software Upload 51
Table 6-6 Communication with the SN 52
Table 6-7 Monitor Health & Safety 54
Table 6-8 Safehold/Autonomous Failsafe Occurrence and Recovery Mission 55
Table 6-9 User Query Order and Product Distribution 56
Table 6-10 Scene Request & Delivery 58
Table 6-11 Backup Flight Operations 60

1.0 INTRODUCTION

The Landsat 9 (L9) mission is a joint mission being formulated, implemented, and operated by the National Aeronautics and Space Administration (NASA) and the Department of Interior (DOI) U.S. Geological Survey (USGS). L9 is a remote sensing satellite mission providing coverage of the Earth's land surfaces. This mission continues the 43+ years of global data collection and distribution provided by the Landsat series of satellites.

1.1 Purpose

The primary purpose of this L9 operations concept document is to describe the planned functions and operations of the L9 System, which consists of space and ground assets. This operations concept is not a requirements document and does not contain L9 requirements. Rather, this document presents a functional view of the L9 System and operations based on high-level Landsat Program guidance. This document represents the operational approaches used to develop and set context for the mission and Segment requirements. Functions and scenarios described in this operations concept are not intended to imply design or implementation approaches for the specific elements that make up the L9 System. This operations concept describes an approach to meeting mission requirements based on the current understanding of capabilities provided by the Space Segment and the Ground System (GS).

1.2 Scope

The scope of this operations concept includes all functions associated with the L9 System as well as the external entities that interact with the L9 System. Thus, this document encompasses the collection of image data by the Observatory, transmission of data to the ground, and processing, archival, and distribution of the data for the Landsat data user community.

1.3 Background

The L9 mission is a component of the Sustainable Land Imaging (SLI) Program conducted jointly by NASA and USGS of the DOI. The goal of the L9 is to continue the collection, archival, and distribution of multispectral imagery affording global, synoptic, and repetitive coverage of the Earth's land surfaces at a scale where natural and human-induced changes can be detected, differentiated, characterized, and monitored over time. The L9 goal is in keeping with the Landsat programmatic goals stated in the United States Code (USC) Title 15, Chapter 82 "Land Remote Sensing Policy" (derived from the Land Remote Sensing Policy Act of 1992). This policy requires that the Landsat Program provide data into the future that are sufficiently consistent with previous Landsat data to allow the detection and quantitative characterization of changes in or on the land surface of the globe. The L9 was conceived as a follow-on mission to the highly successful Landsat series of missions that have provided satellite coverage of the Earth's continental surfaces since 1972. The data from these missions constitute the longest continuous record of the Earth's surface as seen from space.

The L9 is intended to ensure that Landsat-like data will be provided to the USGS National Satellite Land Remote Sensing Data Archive (NSLRSDA) for at least 5 years. The intent with the implementation of L9 is to leverage, to the extent practical, the designs and systems used for Landsat 8 (L8).

CHECK WITH LANDSAT 9 DATABASE AT:
https://<TBD>
TO VERIFY THAT THIS IS THE CORRECT VERSION PRIOR TO USE.
Use or disclosure of data contained on this page is subject to the restriction(s) on the title page of this document.

1.4 L9 Mission Objectives

The major L9 mission objectives are as follows:

- Collect and archive medium resolution (*circa* 30 m spatial resolution) multispectral image data affording seasonal coverage of the global land mass for a period of no less than five years
- Ensure that L9 data are sufficiently consistent with data from the earlier Landsat missions, in terms of acquisition geometry, calibration, coverage characteristics, spectral characteristics, output product quality, and data availability to permit studies of land cover and land use change over multi-decadal periods
- Distribute L9 data products to the public on a nondiscriminatory basis

1.5 Roles and Responsibilities

NASA and USGS, as Landsat Program Management, will share the overall responsibility of fulfilling the L9 mission objectives and all subsequent requirements. The roles and responsibilities related to this operations concept are as follows:

NASA will:

- Acquire and manage the development of the L9 Space Segment
- Acquire and manage the L9 Launch Services Segment
- Serve as L9 mission integrator
- Manage the L9 Observatory (integrated spacecraft and imaging sensors) on-orbit operations from launch through on-orbit acceptance
- Transition L9 mission operations capabilities and Observatory operational and maintenance responsibility to USGS, following on-orbit acceptance
- Provide support to the Calibration / Validation Team (CVT) and Science Teams throughout the mission
- Provide NEN telemetry, commanding, ground-based tracking, and communication services during Launch and Early Orbit (L&EO) and contingency services
- Provide SN TDRSS interface for S-Band communications during L&EO, and for emergencies, maneuvers, and anomaly resolution following commissioning
- Provide Flight Dynamics Facility (FDF) L&EO support for acquisition data (NEN, SN, LGN) and orbit determination
- Provide Conjunction Assessment Risk Assessment (CARA) services for the life of the L9 mission

USGS will:

- Manage the development and operation of the L9 Data Processing and Archive System (DPAS)
- Manage the development and operation of the L9 Ground Network Element (GNE)
- Manage the development and operation of the L9 Mission Operations Center (MOC)
- Operate the L9 Observatory following on-orbit acceptance and throughout the life of the mission

CHECK WITH LANDSAT 9 DATABASE AT:
https://<TBD>
TO VERIFY THAT THIS IS THE CORRECT VERSION PRIOR TO USE.
Use or disclosure of data contained on this page is subject to the restriction(s) on the title page of this document.

- Maintain and support the CVT and Science Team activities for the life of the mission

The L9 Project Office at NASA Goddard Space Flight Center (GSFC) and the L9 Project Office at the USGS Earth Resources Observation and Science (EROS) Center established a Project Implementation Agreement (PIA) that further details the responsibilities of and relationship between the offices and supersedes any statements above.

1.6 Documentation Organization

This document contains the following sections:

- Section 1.0 introduces the L9 and this operations concept
- Section 2.0 provides a high-level overview of the L9 System
- Section 0 describes the L9 System capabilities and interfaces that significantly influence the operational concept
- Section 4.0 presents an overview of the logistics support and sustaining engineering that will be provided to the L9
- Section 5.0 describes the operational phases of the mission
- Section 6.0 illustrates L9 operational scenarios for selected sequences of events during the mission life

1.7 Related Documentation

Table 1-1 Related Documents

Document Number	Revision/Release Date	Document Title
L9-01-12	Draft	Landsat 9 (L9) NASA Goddard Space Flight Center (GSFC) and the USGS Earth Resources Observation and Science (EROS) Center Project Implementation Agreement
L9-02-06	Baseline, September 2015	L9 Acronym List and Lexicon
GSFC 427-02-07	January 4, 2007	L9 World Reference System-2
L9-02-01	Draft	L9 Science & Mission Requirements Document (SMRD)
L9-06-03	Baseline, December 2015	L9 Spacecraft Requirements Document (SRD)
L9-02-03	Baseline, September 2015	L9 Observatory Interface Requirements Document (OIRD)
L9-10-01	TBD	L9 Mission Integration and Test Plan

2.0 SYSTEM CONCEPT

The L9 System will include all components and capabilities, both space- and ground-based, under the developmental and operational responsibility of the L9 NASA-USGS Interagency Team. For mission definition and formulation purposes, the L9 System is defined at the highest level in terms of three major Systems - the Space Segment, Ground System, and Launch Services Segment (see Figure 2-1). The Space Segment will include the spacecraft bus, the Operational Land Imager 2

CHECK WITH LANDSAT 9 DATABASE AT:
https://<TBD>
TO VERIFY THAT THIS IS THE CORRECT VERSION PRIOR TO USE.
Use or disclosure of data contained on this page is subject to the restriction(s) on the title page of this document.

(OLI-2) instrument, and the Thermal Infra-Red Sensor 2 (TIRS-2) instrument. The GNE, MOC, and DPAS will compose the GS. The launch vehicle, launch site, and launch preparation facilities will compose the Launch Segment. It should be noted that the specific functions within these Segments might change during the implementation phase of the L9 mission.

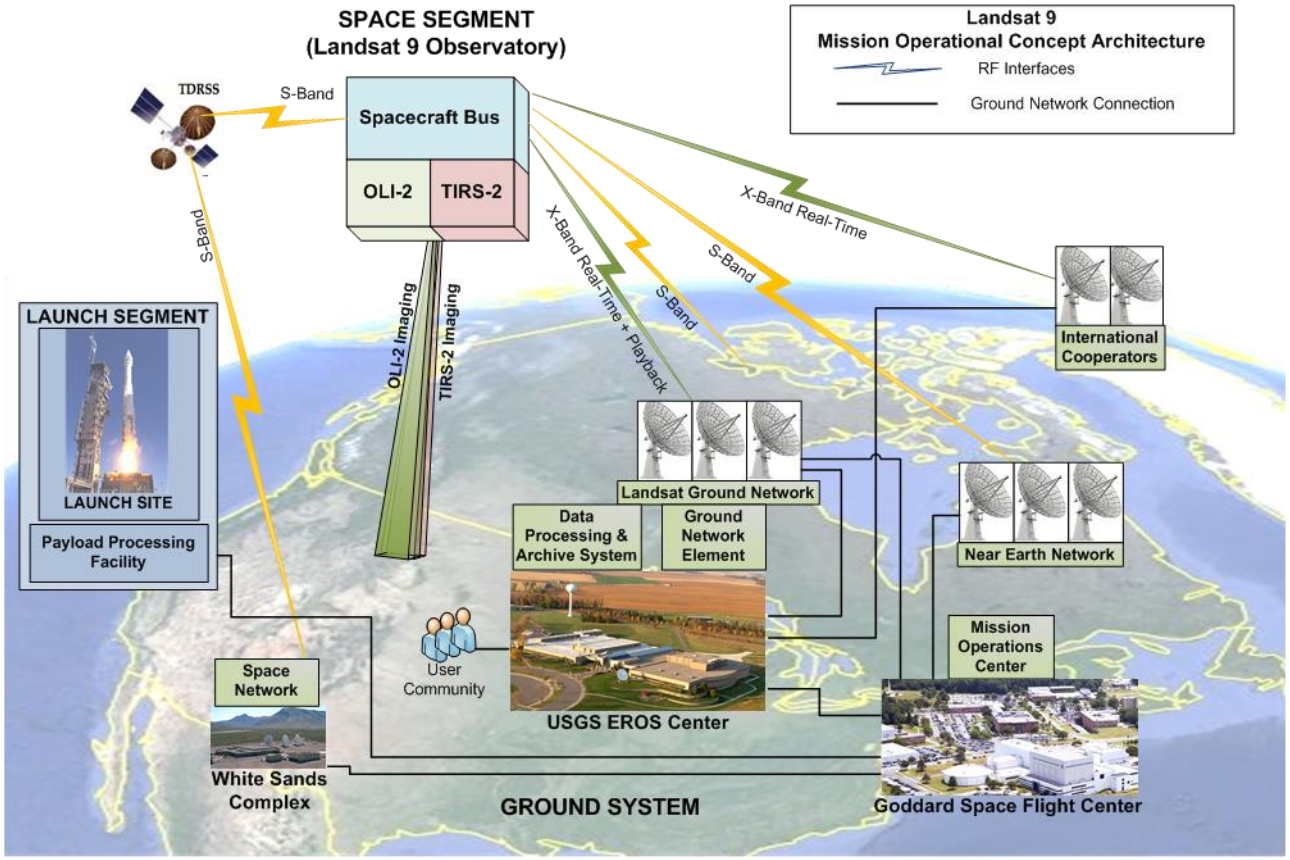

Figure 2-1 L9 Operations Concept Architecture

2.1 Space Segment

The Space Segment will consist of the Observatory and prelaunch Ground Support Equipment (GSE). The Observatory will consist of the spacecraft and two instruments.

The spacecraft will contain typical Earth-observing spacecraft functionality and will supply ancillary data to the instrument suite necessary to meet mission and imaging requirements. The Operational Land Imager 2 (OLI-2) instrument, will be required to provide nine spectral bands with a maximum ground sampling distance, both in-track and cross-track, of 30 m for all bands except the panchromatic band, which will be required to have a 15 m ground sample distance. The OLI-2 will have a minimum of 185 km cross-track swath width as measured at the equator at an orbital altitude of 705 km. The Thermal Infrared Sensor 2 (TIRS-2) instrument will have a similar cross-track swath width but a ground sample distance of approximately 100 m for two bands.

Imaging sensor and ancillary data (combined as Mission Data) will be collected, stored on board, and subsequently downlinked to Ground Stations within the L9 GNE via an X-Band

CHECK WITH LANDSAT 9 DATABASE AT:
https://<TBD>
TO VERIFY THAT THIS IS THE CORRECT VERSION PRIOR TO USE.
Use or disclosure of data contained on this page is subject to the restriction(s) on the title page of this document.

communications link. Additionally, an X-Band downlink capability will transmit Mission Data in real-time to the Landsat Ground Network (LGN) and to International Cooperators (ICs) equipped to receive it. The Observatory will also receive and execute commands and transmit real-time housekeeping telemetry via an S-Band link to the LGN. The Observatory will be capable of S-Band communications with the NASA Near Earth Network (NEN) and the Space Network (SN). Both of these networks will be used as needed to support launch, early orbit, routine operations, and contingency operations.

The Observatory will operate in a nominal mission orbit of 705 ± 1 km altitude at 98.2 ± 0.15° inclination with a small eccentricity. This orbit is Sun-synchronous, and with the proper orientation of the line of apsides, will produce a "Frozen Orbit." The spacecraft will implement a yaw compensation maneuver to account for Earth rotation effects on the image ground track.

The Space Segment GSE will provide the functionality to perform ground-based Integration and Test (I&T) of the Observatory prior to launch. Other associated GSE provides for the following:

- Spacecraft interface simulation
- Flight software development
- Mechanical handling and shipping equipment
- Electrical interface with power and test equipment

Additionally, the spacecraft vendor will produce a high-fidelity spacecraft simulator, integrated with instrument simulators to produce a Spacecraft / Observatory Simulator (SOS). This SOS will be integrated with a Command and Telemetry Processor (CTP), and wideband data equipment from the GNE, delivered to the L9 project, and used to support GS testing, personnel training, and evaluation of operational products.

2.2 Ground System (GS)

The L9 GS will include the GNE, MOC, and DPAS. The following subsections describe these capabilities.

2.2.1 Ground Network Element (GNE)

The GNE will include the Ground Stations that will communicate with the Observatory for commanding and housekeeping data via the S-Band, and will receive Mission Data from the Observatory over the X-Band. The GNE will be composed of the LGN and the wideband data collection and routing system.

The LGN will comprise of three ground stations: the USGS Landsat Ground Station (LGS) at the USGS EROS Center in Sioux Falls South Dakota; the National Oceanic and Atmospheric Administration (NOAA) Gilmore Creek Station (GLC) in Fairbanks Alaska; and the SvalSat facility (SGS) in Svalbard Norway.

These LGN stations will have the capability to simultaneously transmit the S-Band command uplink to the observatory while receiving S-Band and X-Band signals to route housekeeping data to the MOC and Mission Data to the DPAS. Assembly of Mission Data files into complete imaging

CHECK WITH LANDSAT 9 DATABASE AT:
https://<TBD>
TO VERIFY THAT THIS IS THE CORRECT VERSION PRIOR TO USE.
Use or disclosure of data contained on this page is subject to the restriction(s) on the title page of this document.

intervals will be performed by the GNE's wideband data collection and routing system located at the EROS facility.

2.2.2 Mission Operations Center (MOC)

The MOC will provide the primary means to control and monitor the spacecraft. The Landsat 9 Flight Operations Team (FOT) will reside within the MOC. The MOC and FOT will perform mission planning and scheduling, command and control, health and status monitoring, orbit and attitude maintenance, performance analysis, onboard memory management, and flight and ground software maintenance. The FOT will utilize MOC functionality to detect, investigate and resolve spacecraft anomalies, and generate the instrument image collection schedules.

Routine operations will be conducted from the L9 MOC deployed at NASA GSFC in Greenbelt, MD. A backup MOC (bMOC) will be established to support MOC contingency operations at a geographically separate location from the MOC. The bMOC will contain functionality necessary to maintain health and safety, receive and process real-time telemetry, provide the capabilities to command the Observatory, and perform science data planning & scheduling functions to continue nominal operations if the primary MOC is unavailable.

2.2.3 Data Processing and Archive System (DPAS)

The DPAS will ingest, process, distribute, and archive all L9 Mission Data. It will consist of four functionalities: Ingest, Storage and Archive, Image Processing, and Access and Distribution. The Storage and Archive function will perform near-term and long-term archiving. Ingest will perform preprocessing, scene framing, and ancillary data processing of the data. The Image Processing function will process data to create L9 data products, and will perform image assessment. This will include generating Landsat Worldwide Reference System-2 (WRS-2) scenes, including scene overlap regions. The L9 CVT will interact with the image assessment capability to assess data quality and update calibration parameters. Access and Distribution will provide a capability for authorized users to request for L9 image collections. Access and Distribution will provide a capability for all users to access data products. The DPAS will be located at the USGS EROS Center in Sioux Falls, SD.

2.3 Launch Services Segment (LSS)

The Launch Services Segment will provide the assets and services associated with the Launch Vehicle (LV) and the Observatory-to-LV integration. Included, along with the LV, will be all LV ground support equipment, property, and facilities to integrate the Observatory to the LV, verify their integration, and conduct prelaunch testing with ground-based functions. The launch site will be located at Vandenberg Air Force Base (VAFB) in California.

2.4 L9 External System Interfaces

Certain external entities will exchange information with the L9 System, as described in the following subsections.

2.4.1 NASA Space Network (SN)

NASA's SN will provide S-Band communications capabilities for L9. The SN Tracking and Data Relay Satellite System (TDRSS) will provide bidirectional data transmission services between L9 and ground receiving stations using satellite-to-satellite communications links to allow communications when L9 is not in view of a Ground Station. L9 will utilize the SN S-band uplink

CHECK WITH LANDSAT 9 DATABASE AT:
https://<TBD>
TO VERIFY THAT THIS IS THE CORRECT VERSION PRIOR TO USE.
Use or disclosure of data contained on this page is subject to the restriction(s) on the title page of this document.

and downlink capabilities during launch and early orbit, and potentially for emergencies, critical maneuvers, and anomaly resolution. The L9 MOC will interface to the SN through the SN White Sands Complex (WSC) in Las Cruces, NM. The WSC will perform S-Band communications directly with the SN satellites. Link service requests and real-time messaging will be transferred between the WSC and the MOC. The scheduling of SN capabilities will be performed through SN scheduling tools resident in the MOC. Following commissioning, the SN will only be used to support Observatory emergency operations and special operations, as appropriate.

2.4.2 NASA Near Earth Network (NEN)

The NASA NEN includes several satellite ground receiving stations throughout the world that are available to support NASA missions. L9 will interface with a subset of NEN stations for support during launch and early orbit operations. Following commissioning, the NEN will only be used in support of Observatory emergencies. The NEN stations will provide S-Band services for uplink and downlink only, with no X-Band reception.

2.4.3 NASA Integrated Service Network (NISN)

NISN provides Wide Area Network (WAN), data, voice, FAX, video, and other communications services. L9 will use a combination of services on the NASA Mission Network (Closed, Restricted, and Open Segments) between the MOC and other L9 System interfaces, NASA Communications (NASCOM) voice services, FAX, and video services.

2.4.4 NASA GSFC Flight Dynamics Analysis

The L9 will use NASA GSFC Flight Dynamics Analysis services during prelaunch, early orbit, and for anomaly resolution activities. The NASA GSFC maintains a Flight Dynamics Facility (FDF) that provides attitude and orbit determination, prediction, and control services that may be used in this support.

2.4.5 GSFC Space System Protection Mission Support Office (SSP-MSO)

The GSFC SSP-MSO will perform routine Conjunction Assessment (CA) analysis for L9 using data provided by the United States Strategic Command (USSTRATCOM) Joint Space Operations Center (JSpOC). The JSpOC will generate close approach predictions between L9 and other objects in USSTRATCOM's Space Object Catalog, using an L9-provided ephemeris. The GSFC CA Team will determine the threat posed to L9 by each predicted event by computing the collision risk probability and analyzing other relevant factors. If needed, the GSFC CA Team will provide consultation support to L9 in planning any appropriate risk-mitigating action.

2.4.6 Earth Science Mission Operations (ESMO)

The ESMO office at NASA GSFC is responsible for the operation of several NASA Earth science missions. The L9 orbit will allow L9 to fly as part of a morning constellation that will include several ESMO missions, if they are still operational (this constellation presently consists of Landsat 7, Landsat 8, Terra, and Earth Observing 1 (EO-1)). Any required orbit or maneuver coordination to maintain this constellation will be performed through human interaction with the ESMO staff and the exchange of state vectors corresponding to Observatory orbits.

CHECK WITH LANDSAT 9 DATABASE AT:
https://<TBD>
TO VERIFY THAT THIS IS THE CORRECT VERSION PRIOR TO USE.
Use or disclosure of data contained on this page is subject to the restriction(s) on the title page of this document.

2.4.6.1 Constellation Coordination System (CCS)

The CCS is an existing functionality that provides easy exchange of orbit data between missions. The L9 Flight Operations Team (FOT) will exchange ephemeris with the CCS Web server in support of ESMO and Space System Protection Mission Support Office (SSPMSO) operations.

2.4.7 Flight Software Vendors

The spacecraft and instrument development contractors / organizations will modify or update the Observatory flight software. For the spacecraft, the Spacecraft Vendor will perform the flight software updates. For the instruments, the OLI-2 vendor and the GSFC TIRS-2 team each will provide any flight software updates for their respective instruments. The MOC will receive flight software modifications / updates for Observatory upload. The MOC will test all flight software update command loads on the Spacecraft / Observatory Simulator (SOS) prior to flight Observatory upload and following Configuration Control Board (CCB) approval. The MOC will maintain Observatory flight software version control after launch.

2.4.8 External Data Sources

L9 will use certain external data as input to the MOC and the DPAS. This data will include auxiliary data such as government-provided ground control data and Digital Elevation Models (DEMs) for terrain correction to support imaging sensor calibration. External data will also include cloud-prediction information used in data collection scheduling, or other data sets that are used to operate the mission or produce L9 data products.

2.4.8.1 National Center for Environment Predictions (NCEP)

L9 will obtain cloud cover predictions from NCEP periodically throughout the day to support MOC scene selection.

2.4.8.2 US Naval Observatory (USNO)

L9 will obtain Universal Time Code (UTC) / UTC Corrected (UTC1) timing and polar-wander information from the USNO.

2.4.9 International Cooperators (ICs) Interface

The L9 ICs will be capable of receiving real-time downlinks of X-Band imaging sensor data. ICs will receive the real-time imaging data whenever the Observatory is within the acquisition circle of the ground station. The ICs can submit individual scene collection requests through the DPAS, and any special request such as night collects and/or off-nadir collects, are evaluated for acceptance or rejection by the Data Acquisition Manager (DAM). If approved the request is added to the MOC observatory activity schedule. ICs will notify the FOT of any Ground Station malfunctions or scheduled downtimes. The IC station contact schedules and acquisition data will be generated and distributed by the MOC for access by the ICs via the DPAS, and after acquisition ICs will provide post pass and scene metadata reports back to the DPAS. The DPAS will provide ICs with ground processing source code and documentation as well as calibration and ancillary data for IC image data processing. ICs will also provide mission and optionally Level 1 product data to the DPAS for annual data validation to enable potential data exchange.

CHECK WITH LANDSAT 9 DATABASE AT:
https://<TBD>
TO VERIFY THAT THIS IS THE CORRECT VERSION PRIOR TO USE.
Use or disclosure of data contained on this page is subject to the restriction(s) on the title page of this document.

2.5 Primary System Users

The following subsections describe the groups and teams that will use or interact with the capabilities of the L9.

2.5.1 User Community

The user community encompasses all of the members of the public, general users who use Landsat data for purposes such as scientific research and operational resource management. The user community will interface to the DPAS to search for, browse, order, and receive L9 data products, and to request image collections. Authorized users that are registered and approved through the U.S. Geological Survey, can request and receive special collection data once the request is approved by the Data Acquisition Manager. The Flight Operations Team, Cal/Val Team, International Cooperators, and Emergency Response members make up the majority of authorized users.

2.5.2 GNE Operators

Operation of the GNE will be supported by the LGN Station Operators and the Wideband Data Capture Operators. Station Operators will monitor station automated functions, provide direct station control, interface with the MOC, and perform off-line functions such as station scheduling. Station Operators will be located at the LGN stations, and will provide support for real-time contact operations. Wideband Data Capture Operators will monitor the performance of the wideband data capture systems, resolve interval data bundling issues, and interface with the MOC and DPAS.

2.5.3 Flight Operations Team (FOT)

The L9 FOT is the team of mission operations personnel managed by the USGS. The L9 FOT will use a set of capabilities that will support a variety of operations such as telemetry, command and control, planning and scheduling, mission monitoring and analysis, flight dynamics, onboard memory management, event generation, logging and reporting, and automation to operate the L9 observatory from the MOC. The FOT will operate the MOC and interface with the GNE.

2.5.4 DPAS Operators

DPAS processing will be supported by a team of Operators located in the USGS EROS Center. The DPAS operational personnel will oversee the day-to-day DPAS operations by monitoring the system and performing intervention when necessary. They will provide oversight and accounting for the processing of Mission Data to products.

2.5.5 Data Acquisition Manager (DAM)

The USGS DAM will manage the data collection schedules for L9. The DAM will approve special requests and make priority conflict arbitration decisions. Once approved, the requests will be added to the collection-planning database for scheduling. The DAM will be able to adjust collection request priorities, adjust user priority ranges, and approve / disapprove special, IC, and internal image data collection requests.

2.5.6 Mission Management Officer (MMO)

The MMO oversees USGS operations activities and coordinates with NASA mission operations management prior to launch and commissioning of the L9 observatory. Post-commissioning, the MMO is accountable for all L9 mission operations; the MMO provides oversight, and ensures

CHECK WITH LANDSAT 9 DATABASE AT:
https://<TBD>
TO VERIFY THAT THIS IS THE CORRECT VERSION PRIOR TO USE.
Use or disclosure of data contained on this page is subject to the restriction(s) on the title page of this document.

efficient execution. The MMO directs metric collection and report generation in support of anomaly resolution and continuous validation activities.

2.5.7 Landsat Science Team (LST)

The USGS will convene an LST composed of competitively selected investigators. The LST will conduct research on issues critical to the success of the L9, including data collection, product access and format, practical applications, and science opportunities for new- and past-generation Landsat data. The LST will offer research and science support to the USGS on topics that will affect the overall success of the L9 mission. The USGS and NASA L9 Project Scientists will co-chair the LST.

2.5.8 Calibration / Validation Team (CVT)

The CVT will consists of disciplined Scientists and Engineers who will perform calibration of the L9 imaging sensor and data. The geographically dispersed CVT will include members from both NASA and USGS. While the team will advise on and review imaging sensor calibration activities, they will remain independent from the development contractor / organization in their calibration assessments through the life of the mission. NASA will lead this team during Observatory development through on-orbit acceptance. Following on-orbit acceptance, the CVT will be led by USGS. The functions performed by the CVT will include the following:

- Overall oversight and coordination of calibration and validation activities
- Algorithm development
- Instrument performance characterization
- Calibration parameter determination and validation
- Product quality characterization
- Independent calibration verification and calibration continuity
- Anomaly resolution for the L9 Project

The CVT will work with members of the LST and academia on various calibration and validation issues and special collections of L9 data. The FOT and DAM will interact with the CVT on a routine basis to schedule instrument calibration activities.

CHECK WITH LANDSAT 9 DATABASE AT:
https://<TBD>
TO VERIFY THAT THIS IS THE CORRECT VERSION PRIOR TO USE.
Use or disclosure of data contained on this page is subject to the restriction(s) on the title page of this document.

3.0 FUNCTIONAL VIEW OF OPERATION CONCEPT

This section presents the L9 operational concept as a set of functions necessary to execute the mission. The allocation of functions to specific systems and any grouping of functions within systems are based on experience gained from developing similar systems. However, this allocation is not meant to constrain the L9 System architecture that will be defined later in the development cycle. Therefore, while the objective of this operations concept is to capture all necessary functionality of the L9 operations, some functions may ultimately be allocated to different systems.

3.1 Space Segment

The Space Segment will include the L9 Observatory and associated GSE. The L9 Observatory will consist of the spacecraft and imaging sensors. The Spacecraft Vendor will provide the spacecraft and Observatory integration support. The onboard sensors will include the OLI-2 from the OLI-2 Instrument Vendor, and the TIRS-2 provided by NASA GSFC in Greenbelt, MD.

3.1.1 Observatory

Planned for a 5-year minimum mission life, the L9 Observatory will operate in a 705 $\pm$ 1 km Sun-synchronous orbit. The Observatory will have a 16-day ground track repeat cycle and a 10:00 a.m. ($\pm$ 15 minutes) mean local time of the descending node. This will allow imaging sensor data to be referenced to the WRS-2 as part of the ground processing performed by the DPAS.

The L9 Observatory will perform the standard functions of communications, command and data handling, state of health maintenance, attitude / orbit determination and control, image data collection, and memory management.

The observatory shall have the following noteworthy characteristics pertinent to mission operations:

- S-Band downlink of housekeeping data
- S-Band encrypted uplink
- X-Band dual-stream downlink (one stream for real-time, one stream for playback data)
- S- and X-Band communications via an “Earth-Coverage” antenna
- Consultative Committee for Space Data Systems (CCSDS) File Delivery Protocol (CFDP) Class 1 support for Mission Data
- Large capacity (1 day science data) Solid State Recorder (SSR)
- Redundant GPS receiver units that will provide position and timing information
- Two Earth-imaging instruments – OLI-2 and TIRS-2
- Attitude Control System (ACS) that will include a star sensor
- Propulsion system that will support orbit-control capabilities

The OLI-2 instrument will have the following characteristics:

- Largely identical to OLI on Landsat 8
- Push broom scanner with 4-mirror reflective telescope design
- Five visible and near-IR bands (including deep-blue band), and three shortwave-IR bands (including cirrus band) with 30m resolution
- Pan band with 15m resolution
- Baffle and diffuser for solar calibration
- Lunar imaging calibration via S/C bus pointing

CHECK WITH LANDSAT 9 DATABASE AT:
https://<TBD>
TO VERIFY THAT THIS IS THE CORRECT VERSION PRIOR TO USE.
Use or disclosure of data contained on this page is subject to the restriction(s) on the title page of this document.

- 14-bit quantization

The TIRS-2 instrument will have the following key characteristics:

- Upgraded version of TIRS on Landsat 8 to meet class-B (5 year) instrument mission design life
- Push-broom scanner with transmissive optics telescope design
- Two thermal bands
- 100m ground resolution
- Scene-select mirror for deep-space and blackbody calibration
- 12-bit quantization

3.1.1.1 Communications, Command and Data Handling

Nominally, the Observatory will receive S-Band communications from LGN stations. Additionally the SN and NEN will be used during launch and early-orbit or for contingency / emergency operations. Commands and spacecraft software updates received via the S-Band communications stream will be processed onboard and forwarded to the respective Observatory subsystems for execution. The Observatory will nominally receive command loads every 24 hours, and each will encompass 72 hours of imaging activity along with other spacecraft bus activities (i.e. communications management). If an updated command load has not been received at the end of the 72-hour period, the Observatory will be left in a safe operational state. Command links will be established each contact and used as needed to support SSR memory management.

3.1.1.2 Health and Safety Maintenance

The Observatory will monitor the health and status of each subsystem, including the imaging sensors. Corresponding housekeeping telemetry will be generated and stored on board for future transmission. During contacts with an LGN station, the stored and real-time housekeeping telemetry data will be downlinked and forwarded to the MOC for analysis. If any of a predefined list of anomalies occurs, the Observatory will have the ability to detect the anomaly. If the severity of the anomaly warrants it, the Observatory will automatically place itself in a safe and protected state until the anomaly is resolved. Power and thermal management functions will also be performed on board.

3.1.1.3 Attitude / Orbit Determination and Control

The Observatory will have the ability to generate onboard ephemeris and manage spacecraft timing. Navigation and attitude sensor data (raw and processed) will be stored and transmitted as part of the Observatory telemetry. The Observatory will be capable of attitude and orbit adjustments, as commanded by the MOC, to maintain the WRS-2 ground track and related image quality requirements, and to perform required calibration maneuvers.

3.1.1.4 Image Collection

The L9 Observatory's imaging sensors will nominally collect multispectral image data of the Earth, along the WRS-2 ground track. Additionally, the Observatory will be able to collect off-nadir image data up to 15 degrees on either side of the Observatory ground track, in lieu of imaging the nadir WRS-2 path. Off nadir imaging will rarely be performed, since doing so precludes the collection of primary science Mission Data. The Observatory will acquire full lunar disk imagery

CHECK WITH LANDSAT 9 DATABASE AT:
https://<TBD>
TO VERIFY THAT THIS IS THE CORRECT VERSION PRIOR TO USE.
Use or disclosure of data contained on this page is subject to the restriction(s) on the title page of this document.

during one of the two approximately 8-hour-long windows that occur every lunar cycle (approximately 28 days). The Observatory may also perform additional instrument or attitude sensor calibrations using onboard calibration systems or other maneuvers, if necessary.

The Observatory will nominally collect all land image data. The daily collection rate varies, as determined by how much land is overflown. The Observatory will nominally collect a daily average of 750 (TBR) individual scenes over the 16-day repeating ground track, plus any required routine calibration and housekeeping telemetry data needed for processing the image data. Of the 750 (TBR) daily average scene collection, up to 50 of these may be night collections. All image data collections and corresponding image intervals will be selected and scheduled by the MOC, as described in the next subsection. Image collections will include data to support global change research, ICs, special requests, and all daytime scenes over the United States.

3.1.1.5 Data Storage and Downlink

All imaging sensor data will be temporarily stored on board the Observatory. When commanded by the MOC, image data will be transmitted to the ground via an X-Band communications stream. The X-Band data stream will contain the image data and ancillary data, including imaging sensor and select spacecraft housekeeping telemetry, calibration data, and other data necessary for image processing. This aggregation of data is referred to as Mission Data. The X-Band data stream will utilize CCSDS and CFDP Class 1 protocols.

The Observatory is capable of transmitting X-Band data in either or both playback and real-time modes. The LGN stations will routinely receive real-time and playback data. The Observatory will also transmit real-time X-Band data to ICs. All real-time data will be stored on board for subsequent downlink to an LGN station. The Observatory will be capable of transmitting to the LGN stations (in real-time and playback streams) an average of at least 750 (TBR) scenes and associated calibration data per 24-hour period. The Observatory will be capable of re-transmitting telemetry and image data if the original transmission was not properly received.

The L9 Observatory will provide configurable real-time downlinks of Mission Data. Possible combinations include the following:

- Real-time data stream of Mission Data
- Real-time data stream and one playback data stream of Mission Data
- Dual-port or double speed playback data stream

The Observatory will store state of health (i.e., housekeeping) telemetry and make it available for downlink. The data will be stored as files on the SSR. Downlink of the stored state of health data can occur over the S- or X-Band links. Data will be managed by the FOT.

3.1.1.6 Data Management

Storage and downlink of housekeeping and Mission Data on the Observatory will be managed from the MOC, using capabilities of the onboard flight software. The MOC will schedule communications link configuration and data downlink start / stop times.

CHECK WITH LANDSAT 9 DATABASE AT:
https://<TBD>
TO VERIFY THAT THIS IS THE CORRECT VERSION PRIOR TO USE.
Use or disclosure of data contained on this page is subject to the restriction(s) on the title page of this document.

The Observatory will provide the capability to perform the following:

- Record stored state of health and Mission Data
- Delete stored state of health and Mission Data
- Protecting (and unprotecting) stored state of health and Mission Data from being overwritten with newer data
- Downlink by specific order as commanded by the ground, stored state of health, and Mission Data sets
- Downlink by scheme, Mission Data sets
- Maintain a catalog of the onboard data sets and their status
- Downlink the catalog information in housekeeping (state of health) data

Upon execution of the record command, the Observatory will store data in data sets with the attributes specified by the record command. There are two modes of operations concept for SSR management. In the manual mode, it is incumbent upon the MOC to verify that sufficient free space is available on board to complete the record request. If mass storage capacity is reached, the Observatory will automatically stop storing any additional data in mass storage. Cleanup (deletion) of Mission Data in this mode must be commanded by the MOC. In the automatic mode, the observatory autonomously overwrites Mission Data using a scheme described in the Spacecraft Requirements Document.

When commanded for stored Mission Data downlink by scheme, the flight software will automatically downlink the oldest un-transmitted data first. The flight software will mark a file as being played back if the entire file was transmitted without being interrupted by a command.

In support of the automated method of SSR space management, the Observatory will be capable of protecting selected Mission Data in Observatory mass storage from being overwritten by future image collections. The protect capability will be applied and commanded by the MOC to selected image collections or to all image data collected. After downlink is confirmed, the successfully downlinked protected data will be unprotected via ground commands. If downlink cannot be confirmed, data will remain on board for retransmission by ground command during an available LGN station contact.

3.1.2 Spacecraft / Observatory Simulator (SOS)

A key component of the Space Segment, although resident on the ground, will be the Spacecraft/Observatory Simulator (SOS). The SOS will simulate the interaction between the L9 MOC and the actual L9 flight Observatory with high fidelity. The SOS will be integrated with GS provided CTP and wideband data collection equipment from the GNE in order to properly represent the Observatory to GNE interface. The SOS will reside in the L9 MOC. See subsection 3.2.2.3 for additional explanation.

The SOS will be used extensively to support all phases of the mission. The SOS will be used extensively during prelaunch activities to certify the GS and operational products prior to their use with the Observatory (for example, the execution of command sequences being used in Mission Readiness Tests). Science and imagery data will be injected into the SOS through the instrument simulators to generate realistic Mission Data sets that will be used by the DPAS. These Mission

CHECK WITH LANDSAT 9 DATABASE AT:
https://<TBD>
TO VERIFY THAT THIS IS THE CORRECT VERSION PRIOR TO USE.
Use or disclosure of data contained on this page is subject to the restriction(s) on the title page of this document.

Data sets (image and corresponding ancillary data) will be captured from the SOS and distributed throughout the GS to be used in various tests, and can be processed into L1T data products.

The SOS is also used to perform training of the FOT on the spacecraft and Observatory and is used in various exercises, simulations, rehearsals, and day-in-the-life tests. During commissioning, normal operations, and decommissioning, all changes to GS, operational products, special events, and most contingency operations are verified using the SOS prior to execution with the Observatory. The SOS may also be used for on-orbit anomaly investigations and resolutions.

3.1.3 Space Segment Ground Support Equipment (GSE)

Both electrical and mechanical GSE interfaces to the L9 Observatory will be essential to successful Observatory integration and verification. The electrical GSE will originate test commands and receive responses from the Observatory during Observatory-level I&T. The mechanical GSE will be used during the Observatory assembly for the installation and testing of any mechanical components.

A subset of the I&T GSE will travel to the launch site to support Observatory final preparations for launch. The electrical GSE at the launch site will be used in the payload process for launch as well as during the launch countdown to place the L9 Observatory in its final launch configuration.

The MOC-CTP will be used to send commands from the MOC to the various GSE and simulators while also forwarding telemetry received from the spacecraft, Observatory, and simulators back to the MOC. The SOS-CTP is integrated into the SOS and provides the interface between the SOS and the MOC equipment. The SOS-CTP will be used to interface the MOC to the SOS while the SOS is in I&T at the factory. Further information on the HGS and CTP can be found in subsection 5.1.1.2.

3.2 L9 Ground System (GS)

The GS will encompass mission planning, management of the L9 Observatory, transmission of commands to the Observatory, reception of Observatory telemetry and image data, and processing, archiving, and distribution of the data for the Landsat data user community. The GS functional capabilities are discussed in the following subsections.

3.2.1 Ground Network Element (GNE)

The GS will include a ground-based capability, called the GNE, for communicating with the Observatory. The GNE will consist of the LGN and a data-routing capability between the LGN stations and the DPAS.

The primary function of the LGN is to provide Radio Frequency (RF) communications between the Observatory and the ground. The two primary interfaces are the interface between the Observatory and the MOC, and the Observatory and DPAS. The LGN provides the S-band interface between the MOC and Observatory for Telemetry, Tracking, and Control (TT&C). The LGN also provides the X-band interface to receive, collect, and transfer Mission Data intervals from the Observatory to the DPAS for archive and processing. At launch an excess amount of contact time will be scheduled across available stations to ensure ample margin for commissioning; over time, the contacts scheduled will be trimmed to optimize costs and mission performance.

CHECK WITH LANDSAT 9 DATABASE AT:
https://<TBD>
TO VERIFY THAT THIS IS THE CORRECT VERSION PRIOR TO USE.
Use or disclosure of data contained on this page is subject to the restriction(s) on the title page of this document.

The GNE includes a data-routing capability for the wide area network transfer of X-Band Mission Data from LGN stations to the DPAS and network connectivity for the transfer of commands / telemetry between the stations and the MOC in a secure manner. LGN stations will cache X-Band data received for 90 days and S-band data received for 7 days to support continuity of operations, contingencies, and retransfers of data.

Each LGN ground station will be capable of receiving L9 X-Band real-time and playback data. Additionally, these ground stations may provide complete S-Band uplink and downlink capabilities which enable the MOC to communicate with the Observatory. During an X-Band Mission Data downlink event, the ground station will monitor the downlink and provide the MOC a status of Mission Data that were successfully received by the ground following the end of the contact.

The LGN will consist primarily of up to six (TBR) nodes located in: Sioux Falls, South Dakota; Gilmore Creek, Alaska; Svalbard, Norway; Geoscience Australia facility located in Alice Springs, Australia (ASN); the Cuiaba Earth Station in Cuiaba, Brazil (CUB); and the Neustrelitz Ground Station in Neustrelitz, Germany (NSG). These stations will also operate legacy Landsat missions. These stations will provide S-band uplink, S-band downlink, and X-band downlink capability.

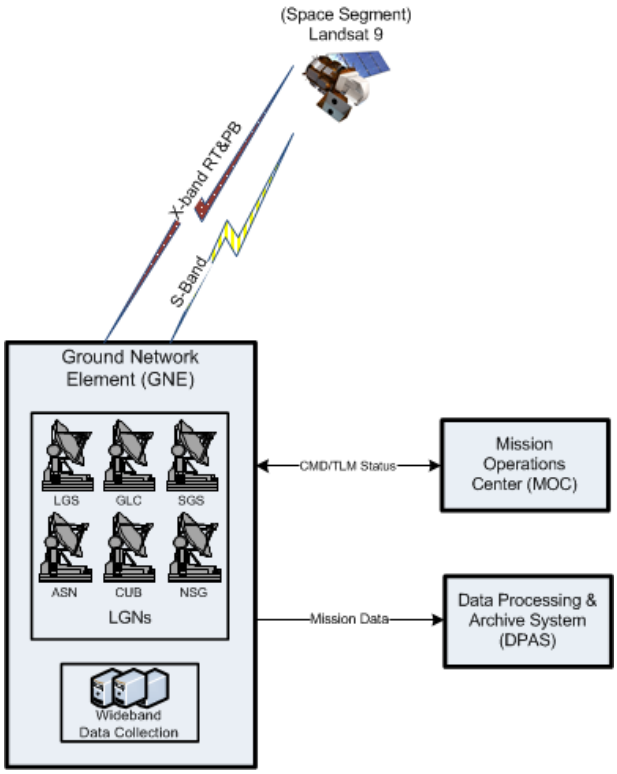

Figure 3-1 Ground Network Element High-Level Concept View

3.2.2 Mission Operations Center (MOC)

The L9 MOC will include all of the ground-based assets needed to operate the L9 Observatory, excluding the ground network. The MOC will plan and schedule all flight operation resources and

CHECK WITH LANDSAT 9 DATABASE AT:
https://<TBD>
TO VERIFY THAT THIS IS THE CORRECT VERSION PRIOR TO USE.
Use or disclosure of data contained on this page is subject to the restriction(s) on the title page of this document.

spacecraft contact activities. The MOC will monitor and control the Observatory and provide a full suite of attitude and orbit determination capabilities within flight dynamics. The MOC will build and send the flight software command loads to implement spacecraft flight software updates. The MOC will handle all of the science, calibration, and Observatory activity planning all the way through generation and verification of stored command loads for the Observatory. Data exchanged with the MOC will include telemetry, commands and control, plans and schedules, trending and analysis summaries, logs, and additional associated interaction. Figure 3-2 presents the high-level concept of the MOC functionality, and key external entity interfaces. MOC detailed operational concepts are described in specific, greater detailed documentation.

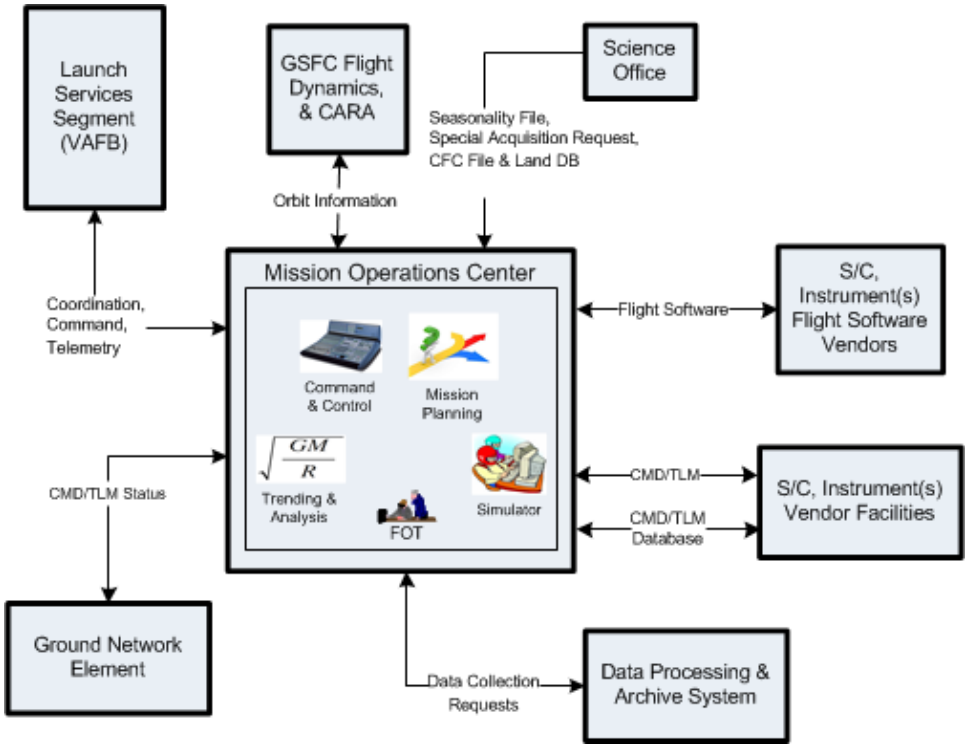

Figure 3-2 Mission Operations Center High-Level Concept View

The MOC will have the capability to support unattended (lights out) operations for limited periods, such as evenings and weekends. Unattended operations include autonomous contacts with Ground Stations, downlink of housekeeping and Mission Data, real-time monitoring of the housekeeping telemetry data, monitoring of imaging sensor data receipt acknowledgements, and commanding to unprotect or delete received Mission Data. The MOC will be capable of autonomously monitoring and reporting systems status, paging staff if required.

3.2.2.1 L9 Long-Term Acquisition Plan (LTAP-9)

The L9 Long Term Acquisition Plan (LTAP-9) is a set of approaches, described in a document, that describe how Landsat 9 should collect science data. The objective of the LTAP-9 will be to develop a high quality observational record based on data acquired by OLI-2 and TIRS-2. The data to be collected by L9 will extend the current 43+ years of global data collection and distribution provided by the Landsat series of satellites. This data constitutes a wealth of information needed to

CHECK WITH LANDSAT 9 DATABASE AT:
https://<TBD>
TO VERIFY THAT THIS IS THE CORRECT VERSION PRIOR TO USE.
Use or disclosure of data contained on this page is subject to the restriction(s) on the title page of this document.

determine the geographic extent and rates of land use and land cover change as well as to support a broad range of studies of land surface dynamics.

The basic premise of the LTAP-9 is to acquire all defined, sunlit, collection sites. This is defined in a table of path/row-based information, and includes all land, coastal/littoral regions, islands, reefs, atolls, and shallow water ecosystems where the sensors provide useful measurements. In addition, there are a variety of night (non-sunlit) targets to be acquired, and a special request process for science campaigns. The LTAP-9 describes the algorithms by which these various acquisitions will be scheduled, and may incorporate historical cloud fraction climatology and cloud cover predictions (TBR).

3.2.2.2 Image Collection Scheduling

Daily cloud cover predictions from the NCEP will be input to the MOC's mission planning capability to identify the best opportunities to collect cloud-free images. The MOC will factor in cloud cover with any Observatory resource constraints and will process all additional imaging requests approved by the DAM. The MOC will perform de-confliction on all of these activities and develop the collection activity schedule. This schedule will be a scene-based list of images to be collected by the imaging sensor, with each scene or imaging sensor activity having been assigned a unique identifier (e.g., path, row, and date). The unique identifier will be shared with the DPAS so that every individual scene requested can be tracked throughout the entire planning, collection, and production process.

The collection activity schedule will be optimized to satisfy the maximum number of requests while fulfilling the LTAP-9 requirements. The process of scheduling all sunlit land is quite straight forward, but night imaging is highly selective (many requests, but limited resources), and other calibration activities and/or observatory activities can conflict with acquiring all land. The criteria for prioritizing collection requests will be defined and documented within MOC operating procedures. The MOC will nominally generate a collection activity schedule every 24 hours, and each will encompass up to 72 hours of activities. The collection activity schedule may be generated more frequently in response to time-critical special requests (off-nadir collections), or other special circumstances that are approved and coordinated by the DAM.

Special imaging requests, such as requests to support natural disasters or unique science research campaigns, will be forwarded to the L9 DAM – USGS team member(s) responsible for coordinating and approving special requests. The DAM will evaluate the special requests using the prioritization criteria and will determine whether they will be scheduled for collection.

3.2.2.3 MOC Interface to Spacecraft / Observatory Simulator (SOS)

The L9 Observatory Simulator will be integrated within the L9 MOC and will have direct interface capabilities. The L9 Observatory Simulator will be used by the FOT to simulate interactions between the MOC and the flight L9 Observatory. This high-fidelity observatory simulator will receive and execute commands, and generate simulated telemetry for analysis by FOT personnel. The MOC-CTP will provide the interface between SOS and MOC for the transfer of command and telemetry data. It will simulate the capabilities of the Observatory and its subsystems, including the L9 imaging sensor. The SOS will also be used to generate Mission Data with science-like imagery, injected through the instrument simulators capture, corresponding to a predetermined on-orbit

CHECK WITH LANDSAT 9 DATABASE AT:
https://<TBD>
TO VERIFY THAT THIS IS THE CORRECT VERSION PRIOR TO USE.
Use or disclosure of data contained on this page is subject to the restriction(s) on the title page of this document.

simulation. This data will be used by the GS for verification and validation activities of the GNE and the DPAS.

The Observatory Simulator will be used, at a minimum, for the following:

- Testing, verification, and validation of the entire GS (MOC, DPAS, and GNE)
- Mission exercises, simulations, and rehearsals
- FOT training
- Procedure validation
- Maneuver rehearsals and validation
- Flight software updates, testing, and validation
- Anomaly investigation and resolution

3.2.2.4 Backup MOC (bMOC)

The MOC will include a bMOC, which will maintain the Observatory health and safety, receive and process real-time telemetry, provide the capabilities to command the Observatory, and perform science data planning & scheduling functions to continue nominal operations if the primary MOC is unavailable. It will be located in a building physically separated from the primary MOC, so that it can serve as a backup in the event of a critical failure, malicious attack, or natural disaster at the primary MOC facility. The bMOC will connect to the Observatory Simulator in the primary MOC via network connection. The primary MOC will routinely share / update command and control data, mission planning data, orbit data, and any other information necessary so that the bMOC can assume operations with no risk to the mission. The bMOC will have the capability to assume nominal operations of the mission within 72 hours (TBR), and will have the capability to perform nominal operations for 30 days. (TBR)

3.2.3 Data Processing and Archive System (DPAS)

The DPAS will provide the functionality for data ingest, processing, archival, and distribution. Ingest and processing will include assessing quality based on characterization and calibration updates. DPAS will provide the capability to discover, receive, and fulfill user requests for L9 image collections and data products distribution. The DPAS will provide the archive that holds and maintains all Landsat data, contains functionality to process Mission Data to produce Level 0 and Level 1 products, and provides an interface for users to search for and access data products. The DPAS will also contain functionality used for calibration and validation of Landsat data and data products. Figure 3-3 presents the high-level concept of the DPAS functionality, and key external entity interfaces. DPAS detailed operational concepts are described in specific, greater detailed documentation.

CHECK WITH LANDSAT 9 DATABASE AT:
https://<TBD>
TO VERIFY THAT THIS IS THE CORRECT VERSION PRIOR TO USE.
Use or disclosure of data contained on this page is subject to the restriction(s) on the title page of this document.

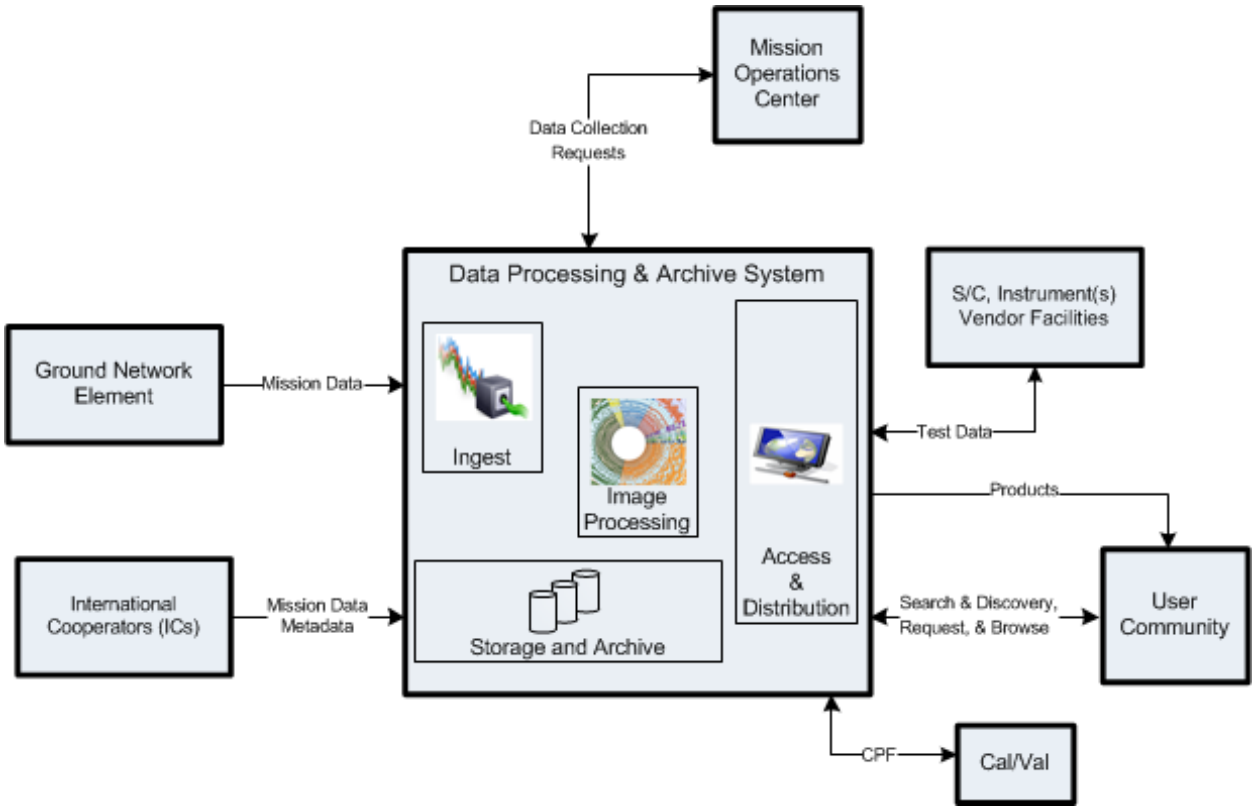

Figure 3-3 Data Processing and Archive System High-Level Concept View

3.3 Launch Services Segment

The Launch Services Segment will consist of the LV and the associated facilities, equipment, and services needed to place the L9 Observatory into orbit.

The L9 Observatory will be launched from the Western Range (WR) at the VAFB located near Lompoc, California. The L9 Observatory will be transported to VAFB to prepare for launch. A Payload Processing Facility (PPF) will be assigned at VAFB to support the final Observatory I&T activities required before launch.

The Launch Services Segment shall have the following characteristics pertinent to the Ground System:

Observatory listen line to the MOC (telemetry only, no commanding)
Ascent data interface to the MOC

3.3.1 Launch Vehicle (LV)

NASA's Kennedy Space Center (KSC) will procure the L9 LV and associated launch services. The LV will be a (TBD). The LV will be delivered to the launch site at VAFB. The L9 Observatory will be mated to the LV at the launch site.

CHECK WITH LANDSAT 9 DATABASE AT:
https://<TBD>
TO VERIFY THAT THIS IS THE CORRECT VERSION PRIOR TO USE.
Use or disclosure of data contained on this page is subject to the restriction(s) on the title page of this document.

3.3.2 Launch Vehicle Ground Support Equipment (LV-GSE)

The LV-GSE will include the mechanical, electrical, communications, propulsion, and monitoring equipment needed to provide launch base services for the L9 launch. The majority of the LV-GSE will be unique to the LV and will have few interfaces to the L9. The following items in the LV-GSE will affect L9 operations:

- Blockhouse console for prelaunch power and commands to the Observatory, and hard line monitors and telemetry from the Observatory via the LV umbilical
- Communications interface equipment to allow command and telemetry from the Observatory electrical GSE to interface with the Observatory while it is mated to the LV
- Observatory handling equipment for mating the Observatory to the LV, installing the fairing, and ensuring a temperature- and humidity-controlled environment

CHECK WITH LANDSAT 9 DATABASE AT:
https://<TBD>
TO VERIFY THAT THIS IS THE CORRECT VERSION PRIOR TO USE.
Use or disclosure of data contained on this page is subject to the restriction(s) on the title page of this document.

4.0 LOGISTICS SUPPORT AND SUSTAINING ENGINEERING

4.1 Logistics Support

4.1.1 Facilities

The facilities logistics functions will provide the L9 physical infrastructure. The physical infrastructure will include everything needed to operate the MOC, GNE equipment, and DPAS, except for the Information Technology (IT) infrastructure and the Ground Station antennas. A non-inclusive list of items provided as part of the physical infrastructure is as follows:

- Power, including backup power
- Heat and air conditioning
- Environmental services
- Buildings, including operating buildings, warehouses, and storage areas
- Facility maintenance
- Construction
- Foundations for the antenna

It is expected that most ground equipment will be located at a USGS facility, at a facility owned by another organization, or both. In either case, the L9 will act as a tenant. Thus, L9 facilities logistics is primarily a management role – coordinating with the Site Facility Manager for the facilities' needs and funding.

4.1.2 Security

L9 protection will address the following:

- Physical security of critical operations facilities such as the MOC, bMOC, and Ground Station, as specified in the USGS L9 System Protection Plan and NPR 1600.1.
- IT security to ensure secure operations of L9 software or network capabilities, as specified in NPR 2810.1A and the USGS L9 System Security Plan. IT security will also include the use of command uplink encryption and authentication in L9 mission operations.

4.1.3 Training

The L9 FOT and other GS operations staff will be trained and certified to operate the mission. FOT training will include the following:

- Functionality of the Observatory (spacecraft and imaging sensor)
- Functionality of the GS software and hardware (including MOC, DPAS, and GNE)
- Operations procedures including launch, early orbit, commissioning, nominal, contingency / recovery procedures
- Operations and maintenance procedures for normal operations and contingencies

Training will take various forms, including exercises to simulate typical day-in-the-life on-orbit Observatory operations and launch rehearsals. To the extent possible / practicable, training will be performed using the system(s) and interfaces that will be used in actual operations. When this is not possible, equipment will be used that emulates the interfaces and simulates performance with high fidelity.

CHECK WITH LANDSAT 9 DATABASE AT:
https://<TBD>
TO VERIFY THAT THIS IS THE CORRECT VERSION PRIOR TO USE.
Use or disclosure of data contained on this page is subject to the restriction(s) on the title page of this document.

4.1.4 Management Support

Management support will provide all management data needed by the L9 Team. Management support logistics functions will include the following:

- Property management, to be performed in accordance with NASA and USGS policies
- Configuration management, to be performed in accordance with the L9 Configuration Management Plan
- Risk management, to be performed in accordance with the L9 Risk Management Plan (it is intended that risk management will be done proactively)
- Safety, to be consistent with NASA and USGS safety policies, plans, and procedures

4.2 Sustaining Engineering

Sustaining engineering support will be provided throughout the life of the L9, supporting the Space Segment, MOC, GNE, and DPAS. All sustaining engineering functions affecting mission operations will be coordinated with the L9 FOT to assure that routine support will not interfere with operations.

4.2.1 Space Segment

Sustaining engineering efforts for the Space Segment will address the following:

- Engineering analysis and expertise to support spacecraft and imaging sensor post-commissioning operations
- Investigation of on-orbit anomalies that affect spacecraft or imaging sensor performance and/or anomalies that threaten sensor or spacecraft health and safety
- Maintenance and update of spacecraft and imaging sensor flight software
- Maintenance of flight software development environment(s)
- Update of flight software development environment software licenses and hardware maintenance contracts
- Maintenance of the SOS and documentation
- Maintenance of imaging sensor Engineering Development Unit (EDU) components for use in resolving on-orbit anomalies

4.2.2 Ground Network Element (GNE)

Sustaining engineering efforts for the GNE will address the following:

- Maintenance and update of LGN software and licenses, hardware, and documentation. This includes ground station antennas, RF hardware, and associated computer systems.
- Investigation of anomalies of the LGN or wideband data capture and routing system
- Maintenance and update of wideband data capture and routing hardware, software, and licenses
- Maintenance of network and IT resources

4.2.3 Mission Operations Center (MOC)

Sustaining engineering efforts for the MOC will address the following:

CHECK WITH LANDSAT 9 DATABASE AT:
https://<TBD>
TO VERIFY THAT THIS IS THE CORRECT VERSION PRIOR TO USE.
Use or disclosure of data contained on this page is subject to the restriction(s) on the title page of this document.

- Maintenance and update of MOC software and licenses, hardware, and documentation
- Investigation of anomalies of the MOC
- Coordination of updates to GNE LGN equipment
- Maintenance of network and IT resources
- Maintenance of any Communications Security (COMSEC) hardware or software

4.2.4 Data Processing and Archive System (DPAS)

Sustaining engineering efforts for the DPAS will address the following:

- Maintenance and update of the Storage and Archive Functionality hardware, software, and licenses
- Maintenance and update of the Ingest Functionality hardware, software, and licenses
- Maintenance and update of the Image Processing Functionality hardware, software, and licenses
- Maintenance and update of the Access and Distribution Functionality hardware, software, and licenses
- Maintenance of network and IT resources

In general, sustaining engineering activities can be grouped as either software or hardware based. Software sustaining engineering generally concentrates on monitoring and maintaining operations; however, software modifications may also be required to improve operations. It is expected that the L9 software will be modular and interoperable so that upgrades are performed easily and cost-effectively. All operational software must follow standard procedures and rigorous testing. Defined software processes will be used and data on how well these processes perform will be collected and used in improvement efforts.

Potential software upgrades and new programs will be evaluated. When the decision is made to use either a new or an upgraded version of software, the software will be tested prior to installation. No operational software will be introduced to the L9 operational system until after it has been thoroughly tested using operational data in a high-fidelity simulation environment. Testing and installation of new or modified software will be performed to ensure transparency and non-interference to operations.

The precise way that ground hardware sustaining engineering will be done will be further defined in the GNE, MOC, and DPAS operations concept documents. It is expected that these architectures will be modular in nature so that future upgrades are easily performed. The maintenance of equipment and implementation of new equipment will be conducted with emphasis on transparency to mission operations. The maintenance and installation process will be compatible with the property management policies referenced in subsection 4.1.1.

CHECK WITH LANDSAT 9 DATABASE AT:
https://<TBD>
TO VERIFY THAT THIS IS THE CORRECT VERSION PRIOR TO USE.
Use or disclosure of data contained on this page is subject to the restriction(s) on the title page of this document.

5.0 OPERATIONS PHASES

L9 operations are described within the context of the following five mission phases:

- Prelaunch
- Launch and Early Orbit
- Commissioning
- Operations
- Decommissioning

5.1 Prelaunch

The prelaunch phase will include imaging sensor, spacecraft, and ground-based system development, testing, and integration through the final phase of launch readiness.

5.1.1 Prelaunch Development and Testing

In the prelaunch phase, the L9 spacecraft and imaging sensors will be designed, developed, and qualified. The L9 CVT will participate in imaging sensor testing by performing independent characterization of the radiometric sources used to characterize the imaging sensors. The CVT will also review imaging sensor calibration / characterization data generated by the instrument Design Teams.

In parallel with the design and development of the Space Segment, the design and development of the Ground System will take place. Imaging sensor test data and developed algorithms will serve as inputs to operational algorithms and software in the Image Processing functionality within the DPAS. To support early development and testing of the GS Elements, an HGS and a CTP will provide the interface between the GS Elements and the spacecraft, Observatory, and Simulator.

The GS will provide a Hallway Ground Station (HGS) and CTPs to the spacecraft vendor to interface to the spacecraft, GSE, and simulators while at the vendor's facility. The HGS will be used to support I&T of S-Band and X-Band RF equipment from the LGN with the spacecraft and to capture any Mission Data from the spacecraft and Observatory during I&T. The HGS will also be used to capture, process, and analyze data from the government-furnished instruments in support of monitoring the instrument health and performance while at the Observatory I&T facility. The HGS will capture Mission Data and store it locally when received from the spacecraft and Observatory. The Mission Data will then be sent to portions of the Ground System for further processing. A network connection provided by the government will provide the access between the HGS and the USGS EROS Center to facilitate the transfer of data.

The CTPs will provide an interface between the spacecraft GSE, Software Development and Validation Facility (SDVF), SOS, and the GS, to support the spacecraft command and telemetry traffic with the MOC during I&T. The SOS-CTP provides the command and telemetry interface between the MOC and SOS. The SOS-CTP will be integrated and tested with the SOS prior to shipment of the simulator to the MOC. The MOC-CTP will provide digital signaling at its interface to communicate with the spacecraft GSE, similar to the demodulated clock and data signals between the spacecraft and the ground networks. During I&T, telemetry will be flowed to the MOC-CTP whenever the spacecraft Observatory is powered, and the MOC-CTP will forward the

CHECK WITH LANDSAT 9 DATABASE AT:
https://<TBD>
TO VERIFY THAT THIS IS THE CORRECT VERSION PRIOR TO USE.
Use or disclosure of data contained on this page is subject to the restriction(s) on the title page of this document.

telemetry stream to the MOC so the FOT can monitor various activities. During Mission Readiness Tests (MRTs), in addition to the telemetry flows, the MOC-CTP will receive commands from the MOC and forward them to the spacecraft / Observatory. The MOC-CTP will connect to the GSE throughout I&T and while the Observatory is at the launch site so telemetry can continue to flow to the MOC up to launch.

5.1.1.1 Ground System (GS) Integration and Test (I&T)

The Ground System I&T will be performed during the prelaunch phase. MOC-to-Observatory I&T will begin with interface / compatibility tests between the MOC and spacecraft communications interfaces, and will continue through I&T of spacecraft and imaging sensors. MOC interface testing will also be performed with the SOS. RF compatibility testing between the Observatory and the GNE, NEN, and the SN will be performed at the end of spacecraft I&T. Upon the completion of spacecraft I&T, the OLI-2 and TIRS-2 instruments will be integrated onto the spacecraft marking the start of Observatory I&T that includes environmental qualifications of the Observatory. Mission Readiness Testing (MRT) between the Space and Ground Segment will be conducted at the end of spacecraft I&T and throughout Observatory I&T.

Within the MOC, GNE and DPAS, Ground System I&T (i.e. Element-to-Element) will be conducted in the months leading up to Segment-level I&T and the MRTs. A series of Ground Readiness Tests (GRTs) will be performed to ensure the necessary functionality with the GS for an upcoming MRT has been demonstrated and verified. GS I&T will test:

- Interfaces between the MOC and GNE, including any COMSEC hardware and software
- Interfaces between DPAS and the user community
- Interfaces between GNE and DPAS including the transfer, assembly of intervals, and generation of products
- Interfaces between MOC and DPAS including collection schedules and requests

Similarly, Element and subsystem I&T will be performed prior to the GRTs to ensure the functionality of each element and subsystem has been verified prior to the GRT.

A key component of the prelaunch phase will be the training of the L9 FOT. The FOT will be fully trained and certified to operate the L9. Training will include Observatory and MOC operations and day-in-the life exercises using nominal and contingency operations procedures. It is expected that FOT training will be performed using the actual MOC system(s), interfacing with the SOS.

5.1.1.2 L9 Mission Integration and Test

L9 integration across all systems will test the end-to-end interfaces between the Observatory, key GNE hardware, MOC, and DPAS to meet all requirements and design intent. This will include end-to-end testing to demonstrate that the total L9 System can plan and execute commands, produce and transmit telemetry, and collect, deliver, and process image data in accordance with requirements. Utilizing a suite of Flight Operations Procedures (FOP)s and Standard Operating Procedures (SOP)s during end-to-end testing, the MOC will generate imaging requests and command the L9 Observatory to produce a data output that will be captured to the onboard mass storage recorder for playback to the GSE and to the HGS. The Mission Data will be flowed through the appropriate GS Elements such as the GNE, MOC, and DPAS, to demonstrate the

CHECK WITH LANDSAT 9 DATABASE AT:
https://<TBD>
TO VERIFY THAT THIS IS THE CORRECT VERSION PRIOR TO USE.
Use or disclosure of data contained on this page is subject to the restriction(s) on the title page of this document.

transfer and ingest of housekeeping and Mission Data. The DPAS will demonstrate the ability to process data through Level 1 data, and make this data available to a limited user community, this activity supports Instrument(s) Operations science data collection, processing, and analysis. Additionally, Day-in-the-Life (DITL) routine and periodic operations are executed repetitively under various conditions, examples include establishment of the ground – space link, Observatory state of health assessment all conducted via connectivity between the MOC and spacecraft I&T facility. Contingency Operations testing which simulates a variety of anomalous behaviors, and Maneuver Operations testing which are simulated to include attitude maneuvers, orbit adjust maneuvers, and Cal/Val maneuvers. These formal sequence of tests will be referred to as the MRT.

5.1.1.3 Observatory Integration and Test

The spacecraft vendor conducts spacecraft component, subsystem, and Observatory-level testing at the spacecraft vendor facility during the pre-launch development phase. Spacecraft vendor testing includes comprehensive performance testing that demonstrate readiness for Observatory level integration prior to Instrument integration, and testing the interfaces between the spacecraft and the OLI-2 and TIRS-2 instrument simulators prior to Instrument integration.

The spacecraft vendor performs RF compatibility testing that verifies the RF and data flow compatibility between the spacecraft and the ground networks. A set of compatibility test equipment (CTE), which entails command telemetry processor (CTP), and demodulator, will be used at the spacecraft vendor facility to interface with the spacecraft to support RF compatibility testing. The CTE will emulate the LGN, SN, and NEN.

Instrument vendors will design, build, and thoroughly test the instruments prior to shipment to the spacecraft vendor facility for integration with the spacecraft bus. Examples of some of the instrument level testing includes comprehensive evaluation of radiometric, spectral, polarization, and spatial characteristics testing, pre and post vibration test for both OLI-2 and TIRS-2 instruments.

Thermal vacuum chamber testing at the spacecraft vendor facility simulates the spacecraft expected outer space environment from within a large chamber where temperatures are controlled over an extended period of time. Following successful I&T of the L9, the Observatory and associated GSE will be prepared for shipping and then shipped to the launch site.

5.1.2 Prelaunch Operations (L-60 to L-1 Days)

Prelaunch operations will include the activities that will occur at VAFB to prepare the satellite for launch into orbit. Prelaunch operations will involve the spacecraft vendor, LV support personnel, and VAFB support personnel.

The prelaunch phase will continue with the arrival of the L9 Observatory at its assigned PPF at VAFB. Observatory prelaunch activities required before mating to the LV will be performed at the PPF (e.g., limited performance tests, cleaning, fueling).

Following final preparations in the PPF, the Observatory will be transported to the launch complex, where it will be mated to the LV. While mated to the LV, an Integrated System Test (IST) will be performed to verify the interfaces between the LV and the Observatory. An Observatory

CHECK WITH LANDSAT 9 DATABASE AT:
https://<TBD>
TO VERIFY THAT THIS IS THE CORRECT VERSION PRIOR TO USE.
Use or disclosure of data contained on this page is subject to the restriction(s) on the title page of this document.

“aliveness” test will also take place to ensure the Observatory is functioning as expected. Observatory telemetry will be flowed to the MOC through the telemetry listen line on the MOC-CTP. Commanding by the MOC to the PPF or launch complex is not planned, but may be exercised if necessary to test or re-test critical commanding functions prior to launch.

Prior to the L9 launch, the launch countdown rehearsals will take place to fully train and prepare the Launch Teams and L9 FOT. Launch and operations procedures will be followed and refined. Immediately following the launch countdown dress rehearsal, the FOT, Instrument, and Spacecraft Teams will continue into a short duration mission simulation at the MOC.

Table 5-1 below illustrates a typical timeline for launch site activities, based on LDCM. The L9 Project will work with the VAFB Launch Team to develop the launch preparation timeline and sequence of events for L9.

Table 5-1 L9 Prelaunch Site Activities (TBD – LDCM Activities Shown)

L-Day	Major Event	Work Content
L-60	LV System Review	
L-45	Observatory arrival at PPF	
L-45	LV Readiness Review (LVRR)	
L-11	Payload Adapter (PLA) / Spacecraft (SC) Mate	1. Payload adapter installed on the SC mating fixture and the payload mated to the payload adapter 2. Payload and adapter transferred to Spacecraft Transportation Vehicle (STV)
L-10	Encapsulation	1. Place encapsulated payload on the Payload Transportation Trailer for transport to the launch site
L-9	Transport Preparations	
L-8	SC Transport / Mate to LV	1. SC transport, hoist, and mate 2. Payload limited functional test
L-7	Integrated System Test (IST)	IST with the SC. The SC will provide input to the test procedure and participate in the test. The test will exercise key elements of the countdown sequence in an abbreviated timeline.
L-6	IST	IST Objectives: - Verify the following: 1. LV and payload interfaces 2. Overall Electromagnetic Interference (EMI) /

CHECK WITH LANDSAT 9 DATABASE AT:
https://<TBD>
TO VERIFY THAT THIS IS THE CORRECT VERSION PRIOR TO USE.
Use or disclosure of data contained on this page is subject to the restriction(s) on the title page of this document.

		Electromagnetic Compatibility (EMC) compatibility 3. LV data flows 4. Power on stray voltage checks 5. Prep LV for closeout
L-5	1. IST Securing and LV Ordnance 2. Flight Readiness Review (FRR) 3. Launch Management Coordination Meeting (LMCM) L-3 to 5 days	
L-4	Observatory Functional	Project to determine the extent of the test
L-3	1. PLF cleaning and inspection 2. SC testing, at Project discretion 3. Mission Dress Rehearsal (MDR) L-2 to 3 days	
L-2	LV FTS and S&A + BT/PLF final cleaning and closeouts	Stray voltage checks for the Flight Termination System
L-1	1. Complete closeouts 2. Launch Readiness Review (LRR)	
L-0	Countdown and Launch	

5.2 Launch and Early Orbit (L-24 hours to Separation)

The launch and early orbit phase will begin with the final countdown to launch and will run through the separation of the L9 Observatory from the LV. This phase of operations will include all autonomous and ground-commanded events from liftoff to start of the separation sequence initiated as L9 de-mates from the LV in flight.

5.2.1 Countdown to launch (L-24 hours to T-0)

Launch day activities will be performed at the VAFB launch site, VAFB launch control center, and the GSFC MOC. The Project Management Team will support the Launch Team at the VAFB launch control center. The MOC will be managed by the NASA Mission Operations Manager (MOM) and operated by the FOT, with support from the spacecraft and instrument providers and project teams. The Launch Team will coordinate with the MOC via the Project Management Team.

The L9 final launch countdown will begin when the NASA/KSC, launch service contractor, L9 Project, and United States Air Force (USAF) WR Launch Teams all agree that there are no impediments to launch. NASA will have the responsibility to make the “Go” / “No Go” launch decision.

5.2.2 Launch and Ascent (T-0 to ~ T+20min)

Launch and ascent operations will be autonomous and will cover the following activities:

- LV ascent
- Observatory separation from the LV
- Start of Observatory flight and separation sequence initialization

CHECK WITH LANDSAT 9 DATABASE AT:
https://<TBD>
TO VERIFY THAT THIS IS THE CORRECT VERSION PRIOR TO USE.
Use or disclosure of data contained on this page is subject to the restriction(s) on the title page of this document.

At T=0, the LV will begin its ascent from the launch facility. During all powered flight portions of the launch and ascent through spacecraft separation, the LV will transmit telemetry to the LV ground-tracking stations and/or instrumented aircraft. After the fairing is jettisoned from the LV, the spacecraft will transmit real-time housekeeping telemetry through the S-Band RF system to the SN.

5.2.3 Separation

After achieving the injection orbit, the LV will release the spacecraft. Following spacecraft release, the LV will perform a collision avoidance maneuver and the spacecraft will begin the execution of a separation sequence. The L9 FOT will assume full operations of the L9 from the MOC after the spacecraft separates from the LV upper stage.

The L9 Project will work with the VAFB Launch Team to develop the timeline sequence for L9.

5.3 Observatory Commissioning (Separation to Acceptance)

Observatory commissioning will begin at spacecraft separation from the LV and will continue until all commissioning activities are complete. Early operations will include two major activities, including activation of the spacecraft subsystems and instrument(s), and on-orbit verification and calibration of subsystem performance in the commissioning phase. It is anticipated that early orbit activities such as spacecraft checkout, orbit raising, imaging sensor dry-out, activation, and decontamination will nominally take place in the first 30 days following launch. Likewise, days 30 – 60 will nominally include imaging sensor transition to operational mode, first light image collection, and start of on-orbit imaging sensor calibration activities with Mission Data flow tests. During this time, the L9 will perform under-fly imaging activities with L8. L9 will perform imaging activities over the same regions as L8 (if operational) at roughly the same time, but at a slightly lower altitude. This simultaneous collection of imagery data from both observatories will be used in calibration and performance assessments of the two instruments.

During on-orbit commissioning and acceptance, the L9 Observatory will demonstrate that it meets predefined performance requirements. The proper functionality of Observatory command and data handling, attitude and orbit determination, and control functions will be demonstrated. The Observatory will be capable of transmitting real-time S-Band telemetry to the SN for routing to the MOC. Additionally, the Observatory will begin transmitting real-time S-Band telemetry to the LGN stations and the NEN. Commissioning will nominally be performed within 90 days after launch (days 60-90). The Commissioning phase testing will address a series of performance requirements for the spacecraft and imaging sensor, such as the first complete 16-day operational test, completion of imaging sensor calibration activities, and development of final test and performance assessments.

In this phase, the L9 FOT will continue to operate the L9 from the GSFC MOC.

5.3.1 Separation Sequence Execution

Upon separation from the LV, the spacecraft will autonomously enter a power-positive safe state and will orient itself so that the Sun is illuminating the solar arrays. After separation from the LV, the spacecraft will perform a preprogrammed activation sequence to provide power to the

CHECK WITH LANDSAT 9 DATABASE AT:
https://<TBD>
TO VERIFY THAT THIS IS THE CORRECT VERSION PRIOR TO USE.
Use or disclosure of data contained on this page is subject to the restriction(s) on the title page of this document.

Observatory and turn on critical subsystems. The critical subsystems will include command and data handling, RF telecommunications, and attitude and orbit control.

The L9 Project will work with the spacecraft vendor, FOT, Instrument, and GS Teams to develop the timeline sequence for L9.

5.3.2 Initial Orbit Determination

Shortly after spacecraft separation, KSC will provide the MOC and the NASA GSFC FDF with a valid spacecraft separation state vector to support the first orbit determination. The FDF will process that vector and provide the MOC with an initial orbit prediction. This will be used to update orbit-dependent planning products, such as Ground Station contact data. The FDF is responsible for providing the official ephemeris updates until the spacecraft GPS performance and MOC orbit determination products have been verified. The FDF will utilize 2-way ranging capabilities from TDRSS to produce the ephemeris updates and provide them to the MOC for distribution throughout the Ground System.

5.3.3 Spacecraft Activation (Flight Day 1 – 35)

In the spacecraft activation phase, the L9 FOT will continue to operate the L9 from the GSFC MOC. Individual spacecraft components and subsystems will be powered, configured, and calibrated to achieve the spacecraft's nominal operational configuration. Initial activation of the instruments will be performed during this timeframe after sufficient time has elapsed to allow for optical bench dry-out. It is anticipated that orbit adjustments will be made during this phase to move the Observatory from its initial parking orbit closer to the "morning constellation" of Earth-observing satellites. These orbit maneuvers may take several weeks and will require periodic orbit determination using Observatory telemetry and flight dynamics analysis. The FDF also supports orbit adjust planning and provides orbit adjust maneuver command data to the MOC for use in command generation. NASA GSFC Flight Dynamics Analysis and FDF will be available to support any commissioning activities, as needed.

Once ephemeris updates have been uploaded to the spacecraft and the spacecraft GPS is verified, the MOC will assume precision orbit determination and ephemeris generation.

The MOC will receive telemetry through the GNE and will begin monitoring spacecraft status and health. Imaging sensor data will also be received by the GNE and routed to the DPAS.

The L9 Project will work with all members of the L9 Team to develop the timeline sequence for L9.

5.3.4 Instrument Activation (Flight Day 35 – 90)

The instrument commissioning activities will include the imaging sensor data collections and spacecraft activities required to complete Observatory on-orbit testing. This will include, but not be limited to, the required calibration activities / maneuvers specified by the OLI-2 and TIRS-2 Special Calibration Test Requirements (SCTR) document. Commissioning activities for the imaging sensors will be included in the collection activity requests, and folded into the MOC mission planning and scheduling process. Observatory commissioning activities will be given scheduling priority during the commissioning phase.

CHECK WITH LANDSAT 9 DATABASE AT:
https://<TBD>
TO VERIFY THAT THIS IS THE CORRECT VERSION PRIOR TO USE.
Use or disclosure of data contained on this page is subject to the restriction(s) on the title page of this document.

In addition, the government's CVT will submit image collection requests for test data to support their independent test and calibration and validation operations. This could include, for example, imagery over various calibration sites (WRS-2 scenes used for Landsat radiometric and geometric calibration) or coincident collections with operational high- and moderate-resolution imaging sensors (ex. Landsat 8). The L9 orbit will be adjusted such that imaging of the same WRS-2 scenes with the other sensors can occur with within one minute of each other. These collections will be coordinated with the operators of those systems as needed. These requests will be provided to the MOC for collection scheduling as long as they do not conflict with the Observatory commissioning schedule. These data sets will be acquired, processed, and archived along with all other imaging sensor data requests. The CVT-requested data sets will be subsequently extracted from the archive for further processing and analysis by the CVT.

The imaging sensors will be activated based on a series of steps following dry-out, including the powering on of imaging sensor electronics, functional checkout of any onboard calibration sources, generation of imaging sensor health and status, and collection of the first image. Imaging sensor data will be transmitted via X-Band communications to the LGN stations.

The L9 Project will work with all members of the L9 Team to develop the instrumentation activation sequence for L9.

Additional operational activities that will occur during commissioning include the following:

- MOC functions of preparing plans and uploads to collect imaging sensor data
- Incrementally increasing Mission Data collection rates
- Transitioning manual Mission Data management to automated functionality within the GS
- Execution of orbit maneuvers to achieve nominal operational orbit
- Receiving sensor data via the LGN
- DPAS processing of image data
- Storage of data within DPAS

5.3.5 Observatory Acceptance

Once the Observatory is fully checked out and calibrated, the on-orbit performance for the acquired image data will be assessed. This will include determining the initial on-orbit Calibration Parameter File (CPF) and presenting the results of on-orbit data processing and analysis. The data sets analyzed will include one or more test scenes processed using government-provided supporting data – Ground Control Points (GCPs) and DEM – after the on-orbit calibration parameters are determined. The L9 instruments will be characterized and evaluated to determine if the imagery will meet performance specifications. This assessment will be a critical step in the on-orbit acceptance of the OLI-2 and TIRS-2 instruments and in the declaration of operational readiness.

At the completion of on-orbit commissioning, an On-orbit Acceptance Review (OAR) will take place. Upon the successful completion of the OAR, NASA, with concurrence from the USGS, will declare the L9 operational. NASA will then transfer ownership and operation of the L9 to the USGS.

CHECK WITH LANDSAT 9 DATABASE AT:
https://<TBD>
TO VERIFY THAT THIS IS THE CORRECT VERSION PRIOR TO USE.
Use or disclosure of data contained on this page is subject to the restriction(s) on the title page of this document.

5.4 Operations

The operations phase represents the period between Observatory commissioning and decommissioning. Operational activities occurring during this time include the following:

- Contact execution (command, telemetry, Mission Data downlink) with various ground sites
- Image planning and constraint checking
- Calibration event planning
- Orbit determination
- Orbit maintenance
- Engineering analysis (trending)
- Mission Data acquisition, processing, and distribution

5.5 Decommissioning

At the end of the mission, the L9 will undergo decommissioning. The decommissioning of the L9 Observatory will comply with the NASA Safety Standard Guidelines and Assessment Procedures for Limiting Orbital Debris (NSS 1740.14) and the NASA Policy for Limiting Orbital Debris Generation (NPD 8710.3). The NASA GSFC FDF will be used to review and approve the de-orbit plans. A decommissioning plan will be produced by the spacecraft vendor and FOT, providing the detailed configuration of the Observatory throughout this phase.

CHECK WITH LANDSAT 9 DATABASE AT:
https://<TBD>
TO VERIFY THAT THIS IS THE CORRECT VERSION PRIOR TO USE.
Use or disclosure of data contained on this page is subject to the restriction(s) on the title page of this document.

6.0 OPERATIONS SCENARIOS

The L9 operations are illustrated by a series of scenarios. These scenarios provide an overview of the major threads through the Operational Concept to describe how major activities are accomplished. The set of scenarios help in understanding how the L9 system behaves, and serves as a tool to aid in verifying the completeness of the Operations Concept. The scenarios do not portray every possible situation that may be encountered during operations but serve as a basis for further operations planning.

Each scenario includes a brief description, a list of assumptions, a data flow figure, and a table that describes the key functions and data flows. The figure below illustrates the graphical convention used for these scenarios. In this example, a function happens at step 1 and data flows to step 2. A function occurs at step 2, and then there are two flows shown. In this example, the primary flow is through steps 3, 4 and then 5. This flow always occurs as these steps are numbered sequentially and shown in the same style. Steps A1 and A2 represent multiple activities that are executed within any given Element and/or Segment diagram box.

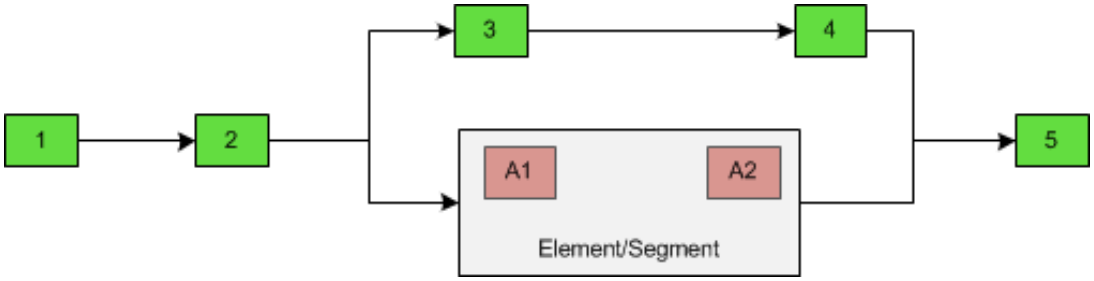

Figure 6-1 Scenario Style Example

6.1 Imaging and Calibration Operations

6.1.1 Description

This scenario describes the nominal imaging and calibration activities that will occur onboard the Observatory.

6.1.2 Assumptions

- All systems are functioning nominally.

6.1.3 Walkthrough of Intervals and Data Collection Types

An interval is defined as any continuous data collection activity (i.e., the instrument(s) start action to stop action pertaining to that collection). The collection activities for Landsat 9 are categorized into one of three types of intervals: Primary Interval (Earth Imaging), Calibration Interval, and Test Data Interval. The data collection requests from various users are deconflicted and grouped together into intervals by the MOC to produce the command loads that are executed by the Observatory.

6.1.3.1 Primary Interval (Earth Imaging) Data Collection Types

"Nominal Earth Imaging" and "Off Nadir Imaging" are the two types of Primary Interval collections. Both of these collection types are nominally performed with both instruments

CHECK WITH LANDSAT 9 DATABASE AT:
https://<TBD>
TO VERIFY THAT THIS IS THE CORRECT VERSION PRIOR TO USE.
Use or disclosure of data contained on this page is subject to the restriction(s) on the title page of this document.

collecting data, however, each of these collection types may be performed with just a single instrument collecting data.

6.1.3.1.1 Nominal Earth Imaging Data Collection

Earth imaging data collections are the primary science operation for L9 and accounts for the majority of the daily data volume. Earth imaging data intervals are collected as continuous swaths of data during spacecraft operation and are cataloged for distribution as along-track image segments, referred to as scenes. The scene centers are based on the Landsat Worldwide Reference System-2 (WRS-2), which is a Landsat-based indexing scheme for the repeating pattern of orbital ground tracks traversed by a spacecraft in a Sun-synchronous orbit. An L9 scene area is defined as 185 kilometer (km) cross-track by 180km along-track from the scene centers, and includes a five percent overlap of the preceding and subsequent scenes. Each day L9 acquires an average of 750 (TBR) scenes worth of Earth imaging. Up to 50 (TBR) of these scenes can be contiguous night scenes. The longest contiguous collections occur over Eurasia-Africa, and are 83 (TBR) scenes long. The instrument fields of views are sufficient to cover the 185km cross track area of a scene when in the nominal mission orbit and the Observatory is pointing the instruments at nadir.

The MOC utilizes the Long Term Acquisition Plan for L9 (LTAP-9), along with approved special requests to determine which scenes are to be collected on for a particular orbit. The continuous scenes being selected are combined into intervals that define the start and stop point for image collection by the instruments. Each orbit can have multiple intervals defined. Nominally there are 24 seconds between the centers of successive scenes. Additional data must be acquired at the beginning and end of intervals to account for the staggered Focal Plane Array layout of the two instruments, and residual uncertainties.

6.1.3.1.2 Off Nadir Data Collection

Special scene collection requests may be made on a scene (or set of scenes) that are up to one WRS2 path to the East or West of a possible near-term nadir path. To image scenes along one of these paths, the Observatory must perform up to a $\pm$ 15 degree roll offset from nadir to align the boresights of the instruments along the targeted path. Once the offset has been applied the instruments begin capturing the off-nadir image data. At the completion of the off-nadir interval, the observatory resumes Earth pointing the instruments to nadir. This capability potentially allows a single scene to be imaged up to three times during the 16 day ground track repeat cycle, for example.

6.1.3.2 Calibration Interval Data Collection Types

Calibration intervals are used to gather data specific for sensor characterization and calibration used in image processing. As noted in the sections below, the calibration collection type may be specific for an individual instrument, or data collection may be performed on both. The 13 types of calibration data collections are:

a. OLI-2 Dark Focal Plane Calibration (AKA Shutter Calibration)
b. OLI-2 Stim Lamp Calibration
c. OLI-2 Solar (Diffuser) Calibration
d. OLI-2 Linearity Calibration

CHECK WITH LANDSAT 9 DATABASE AT:
https://<TBD>
TO VERIFY THAT THIS IS THE CORRECT VERSION PRIOR TO USE.
Use or disclosure of data contained on this page is subject to the restriction(s) on the title page of this document.

e. OLI-2 Extended Dark Calibration
f. Lunar Calibration (both instruments)
g. Side Slither Calibration
h. Stellar Calibration (OLI-2 only)
i. TIRS-2 Normal Calibration (a Blackbody collect followed by a Deep Space collect)
j. TIRS-2 Blackbody Temperature Sweep Calibration
k. TIRS-2 Integration Time Sweep Calibration
l. TIRS-2 Stability Calibration (to verify radiometric stability)
m. TIRS-2 Transmit All Calibration

These calibration data collection types are performed at various frequencies to support both radiometric and geometric calibrations as noted within each of the sections below.

6.1.3.2.1 OLI-2 Dark Focal Plane (Shutter) Calibration

The OLI-2 Dark Focal Plane Calibration is nominally performed twice per orbit for radiometric calibration of the instrument. The first time is prior to the start of an Earth imaging interval on the daylight portion of the orbit, and the second is after the completion of the imaging intervals for that orbit. These collections are also performed prior to and after any other calibration collections. This calibration involves closing the shutter and taking 500 lines of image data to determine the zero-input level, or bias, of the sensors.

6.1.3.2.2 OLI-2 Extended Dark Calibration

The OLI-2 Extended Dark Calibration is nominally performed once every three months for radiometric calibration of the instrument to monitor bias stability. This calibration involves closing the shutter and recording image data just like the OLI-2 Dark Focal Plane Calibration, except 36 minutes worth of dark data is collected vs. 500 lines.

6.1.3.2.3 OLI-2 Stim Lamp Calibration

The OLI-2 Stim Lamp Calibration is nominally performed once per day to check flat fielding of the FPA (radiometric calibration of the instrument). This calibration should occur at a consistent point in the orbit (nominally on the night side to avoid conflicts with daylight imaging). OLI-2 Dark Focal Plane Calibrations occur before and after this calibration which involves closing the shutter, turning-on the lamp, and collecting image data. The daily lamp collects are performed using the working lamp but there are occasional lamp collects performed using both the back-up and pristine lamps during the commissioning period.

A re-calibration of the stim lamp is performed every six months, during which time OLI deploys all three stim lamps (working, back-up and pristine) and both solar diffusers (prime and pristine) to re-calibrate the OLI focal plane output.

6.1.3.2.4 OLI-2 Solar (Diffuser) Calibration

The OLI-2 Solar Calibration is nominally performed twice per cycle (seven to nine days) for radiometric calibration of the instrument. The OLI-2 Solar Calibration utilizes the prime diffuser on the weekly calibrations, and uses the pristine diffuser as part of the stim lamp re-calibration once every six months. The objective is to deploy a solar diffuser (prime or pristine) and observe reflected solar light off the diffuser. The solar calibration collection requires a spacecraft slew in

CHECK WITH LANDSAT 9 DATABASE AT:
https://<TBD>
TO VERIFY THAT THIS IS THE CORRECT VERSION PRIOR TO USE.
Use or disclosure of data contained on this page is subject to the restriction(s) on the title page of this document.

order to point the boresight of the OLI-2 Sun aperture directly at the Sun. This collect is performed during spacecraft day, and the glint-free FOV of the solar aperture must be above the Earth limb to avoid Earth interference. Normally, 500 lines of data are collected for the solar calibration but occasionally an extended solar calibration collect is performed during which 60 seconds of solar data are collected. The solar calibration is one of two types of solar diffuser calibration collections that OLI performs. The second type of collection is performed as part of the quarterly solar integration time sweep (Linearity Calibration). Yaw steering is disabled during solar calibration collections.

6.1.3.2.5 OLI-2 Linearity Calibration

The OLI-2 Linearity Calibration is nominally performed once every three months for radiometric calibration of the instrument. This calibration is the second type of solar calibration mentioned above. It consists of a shutter integration time sweep collections, before after the solar integration time sweep collection. Similar to the solar calibration collection, the linearity calibration collection requires the observatory to slew in order to point the OLI Sun aperture directly at the Sun and involves imaging reflected light off the diffuser. The shutter and solar data are collected at 20 different integration times. The collection of each integration time is delivered as a separate interval to the ground resulting in 60 linearity intervals.

6.1.3.2.6 Lunar Calibration

The Lunar Calibration is nominally performed once every 28 days for radiometric and geometric calibration of the instrument. This calibration requires imaging of the moon across all of the OLI-2 Sensor Chip Assemblies (SCAs), and takes place near to the full moon occurrences. The lunar calibration may be performed over one, two, or three orbits and may include three extended scans that image the full TIRS-2 SCAs. If the lunar calibration is performed over multiple orbits, the last SCA scan from one orbit is repeated as the first SCA scan during the subsequent orbit. These scans occur on the night side of the orbit and the spacecraft is returned to nadir-pointing during the day portion of the orbits so that normal Earth imaging may be collected.

The lunar calibration collect requires a slew to position the OLI telescope aperture near the location of the first scan. Once the slew out is complete, the Observatory remains at that attitude to allow settling from thermal snap as well as other sources of vibrations, prior to the start of the collect. The collection is executed as a series of raster scans across each of the SCAs and each scan is a separate interval. The start of each scan occurs when the leading edge of the SCA scanning the moon is half a moon diameter from the edge of the moon.

Figure 6-2 below shows a very simple representation of the requirements of a Lunar Calibration. The particulars of how the observatory slews from nadir to the starting position is entirely design dependent. The data collection requirement is to align the path that the image of the moon will trace with each OLI-2 SCA in turn. The blue segments in the figure represent the periods during which data will be acquired, and starts a minimum of 1.5 lunar diameters away from the SCA. The exact attitude path followed during imaging needs to be well controlled. The attitude path taken when slewing from one scan to the next is again entirely observatory design dependent.

CHECK WITH LANDSAT 9 DATABASE AT:
https://<TBD>
TO VERIFY THAT THIS IS THE CORRECT VERSION PRIOR TO USE.
Use or disclosure of data contained on this page is subject to the restriction(s) on the title page of this document.

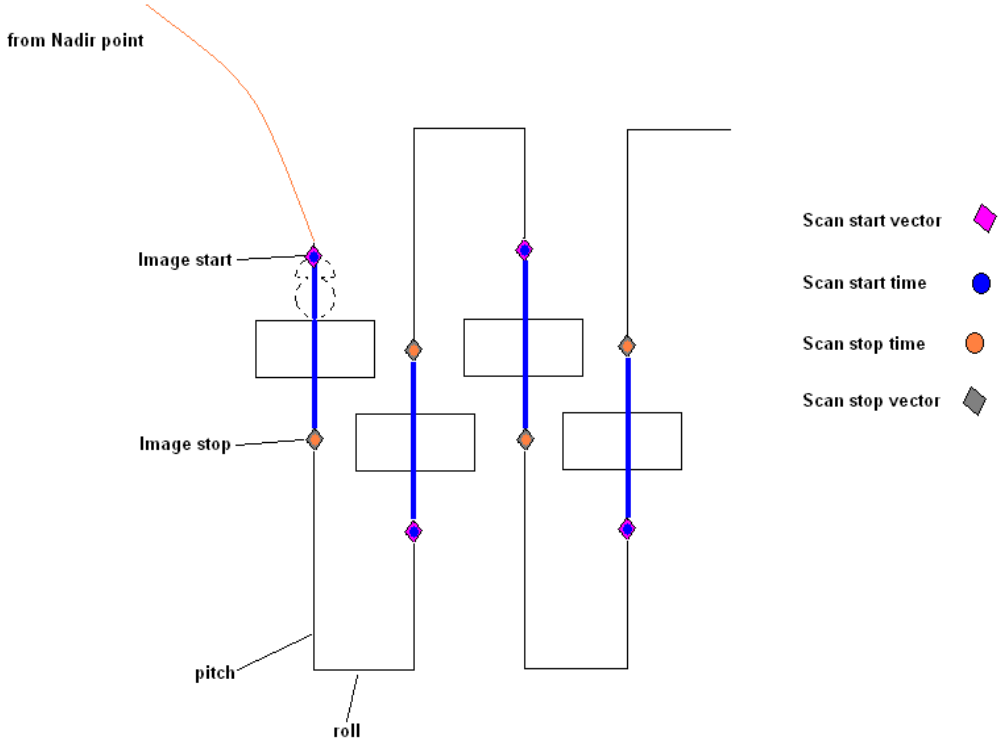

Figure 6-2 Lunar Calibration Slews

6.1.3.2.7 Side Slither Calibration

The Side Slither Calibration is nominally performed once every three months for radiometric calibration of the instrument. More frequent Side Slither Calibrations may be performed during the commission phase of the mission. The side slither calibration consists of yawing (slewing the Observatory about the spacecraft Z axis) the spacecraft ±90 degrees in order to orient the OLI-2 and TIRS-2 image detectors perpendicular to their normal configuration relative to the ground. This method allows each detector to image the same uniform target and provide information on detector-to-detector variation in response. The Sahara desert is the prime target for the side slither calibrations. Seasonal targets are also used, namely the arctic during Northern Hemisphere summer months and Antarctica during the Northern Hemisphere winter months when a minimum desired Sun elevation angle has been reached for these calibrations. Image data from both instruments are collected during this calibration.

6.1.3.2.8 Stellar Calibration

The Stellar Calibration is nominally performed only during commissioning activities for geometric calibration of the instrument. The CALVAL Team predetermines the star field that will be scanned. The star field must have a relatively high number of stars to allow the Star Trackers to meet their requirements. A stellar collection consists of a slew to orient OLI-2 towards an appropriate target star field and a single scan in one direction across a swath of sky that contains the desired star field. This method results in a single stellar calibration collection interval. The star field imagery is processed and compared to the OLI Star Tracker data from the same period to align the telescope boresight with the Star Trackers to confirm the alignment.

CHECK WITH LANDSAT 9 DATABASE AT:
https://<TBD>
TO VERIFY THAT THIS IS THE CORRECT VERSION PRIOR TO USE.
Use or disclosure of data contained on this page is subject to the restriction(s) on the title page of this document.

6.1.3.2.9 TIRS-2 Normal Calibration

The TIRS-2 Normal Calibration is nominally performed twice per orbit in concert with a TIRS-2 Blackbody Calibration for radiometric calibration of the instrument. The TIRS-2 Normal calibration is performed at the start and end of the daylight portion of the orbit with the goal of having this calibration performed as close to the imaging operations as possible. The TIRS-2 Normal Calibration consists of 60 seconds of deep space view data followed by the TIRS-2 Blackbody Calibration consisting of 60 seconds of the onboard blackbody data. The calibration collection sequence also moves the Scene Select Mechanism (SSM) within TIRS-2 to move from nadir to the viewing position, and then return to a nadir imaging position. The calibration collection sequence also includes time for TIRS to regain thermal stability. This calibration provides detector offsets and radiometric stability parameters without interfering with imaging intervals. This calibration can be performed with the Observatory in the nominal nadir pointing mode.

6.1.3.2.10 TIRS-2 Blackbody Temperature Sweep Calibration

The TIRS-2 Blackbody Temperature Sweep Calibration is nominally performed once every three months over the course of two days for radiometric calibration and thermal stability of the instrument. This calibration collection follows the same sequence of events as a TIRS normal radiometric calibration; however, between calibration sequences, the TIRS blackbody temperature changes from 295K to 270K and back over the course of approximately 16 hours on the first day, and from 295K to 320K and back over the course of approximately 16 hours on the second day. This sequence provides the same radiometric data as the TIRS-2 Normal Calibration but with varying temperatures of the blackbody.

6.1.3.2.11 TIRS-2 Integration Time Sweep Calibration

The TIRS-2 Integration Time Sweep Calibration is nominally performed once every 16 days for radiometric calibration of the instrument. This calibration is performed in place of a TIRS-2 Normal Calibration. This calibration collection follows the same sequence of events as a TIRS normal radiometric calibration; however, while viewing the blackbody calibration target and deep space, the integration time (exposure) is varied between 0.1 and 5.5 msec in 0.1 msec steps, separated by 1 second. There is an all-lines variant of the integration time sweep, which is performed only during commissioning.

6.1.3.2.12 TIRS-2 Stability Calibration

The TIRS-2 Stability Calibration is nominally performed once every 3 months and during commissioning for radiometric calibration of the instrument. The TIRS-2 Stability Calibration follows the following sequence:

1. Perform a normal cal
2. Wait five minutes
3. Perform another cal
4. Repeat for 30 times in a row over 1.5 orbits

The total calibration activity duration is approximately 50 minutes. Each of the 10 sets of imaging is performed in the same sequence as the TIRS normal radiometric calibration.

CHECK WITH LANDSAT 9 DATABASE AT:
https://<TBD>
TO VERIFY THAT THIS IS THE CORRECT VERSION PRIOR TO USE.
Use or disclosure of data contained on this page is subject to the restriction(s) on the title page of this document.

6.1.3.2.13 TIRS-2 Transmit All Calibration

The TIRS-2 Transmit All Calibration is nominally performed once every 3 months for radiometric calibration of the instrument. This calibration acquires data for many rows of physical detectors in each SCA and sends the data to the ground instead of the nominal two rows of physical detectors. Two options are available within the transmit all mode which acquires data for a different number of rows of detectors. When in transmit all mode, data is still read out at 70 Hertz (Hz), but the detectors sample at a lower rate so the effective output is a two dimensional array where all the pixels were acquired at the same time. The transmit all mode allows for analyzing stray light and contamination on the spectral filters or detectors, which are difficult or impossible to characterize in the nominal science mode where only two rows of detectors are acquired.

6.1.3.3 Test Interval Data Collection Types

There are three types of Test interval data collection types: Engineering, Solid State Recorder (SSR) Test Sequence, and OLI and TIRS Test Patterns. These data collections are typically used during Observatory Integration and Test, however they could be potentially used for on-orbit diagnostics of the Observatory.

6.1.3.3.1 SSR Test Sequence Collections

The SSR Test Sequence collection is used to designate captured data sets of SSR fill and or test patterns, generated by the spacecraft, not the instruments. Nominally these data collections are produced during Integration and Test, but may also be captured during early orbit checkout, and for on-orbit anomaly investigations and resolutions.

6.1.3.3.2 OLI-2 and TIRS-2 Test Pattern Collections

The OLI-2 and TIRS-2 Test Pattern collection type is used for identifying data sets that contain instrument test patterns. Nominally these data collections are produced during Integration and Test, but may also be captured during early orbit checkout, commissioning, and for on-orbit anomaly investigations and resolutions.

6.2 LGN Contact

6.2.1 Description

This scenario describes the typical LGN contact.

6.2.2 Assumptions

- All systems are functioning nominally.

6.2.3 Walkthrough

Approximately 5-15 min prior to AOS, the station and the MOC will execute the pre-pass sequence to configure the station for L9 and establish the connection between the station and the MOC. Voice communication may take place during this time to coordinate pass activities.

The observatory uses stored CMDs to turn on the S-Band D/L approximately 30 sec before entering the 0° horizon mask of a station to ensure the D/L is present as an acquisition aid for ground station antenna. The station will acquire the S-Band D/L and program-track the observatory until it exits ground clutter, typically around 2-3°, at which point it start S-Band

CHECK WITH LANDSAT 9 DATABASE AT:
https://<TBD>
TO VERIFY THAT THIS IS THE CORRECT VERSION PRIOR TO USE.
Use or disclosure of data contained on this page is subject to the restriction(s) on the title page of this document.

auto-tracking. The TLM RX and CTPs will start sending the received TLM to the MOC as soon as the station acquires the D/L. The MOC/FOT will monitor RT TLM during the course of the contact and also download S-Band stored (back-orbit) TLM. The S-Band D/L is left on until the after the station loses the signal at or around 0° (LOS).

At approximately 3° (this may vary from 3-5° for a specific station) the antenna will rise above the transmit mask and the U/L will be turned on. The exciter will execute the swept acquisition sequence and then decay the sweep at the nominal U/L frequency with modulation enabled. Once modulation is enabled, the MOC will start sending CMDs to the observatory for RT operations and stored CMD uploads. The GNE generates an idle pattern to modulate the U/L when the MOC is not actively commanding. The exciter/transmitter are disabled when the station goes below the transmit mask approaching LOS.

At approximately 5°, the X-Band D/L will be turned on and the station will acquire the Mission Data D/L. RT and/or PB Mission Data will be received and processed by the station. X-Band stored (back-orbit) TLM (AKA SSOH) may also be downlinked during the pass. The station will note each file successfully received (CFPD checksum verified) and the GNE (via the DCRS) will provide a list of received files to the MOC for Mission Data Management. Received Mission Data files are assembled into intervals and sent to the DPAS for processing.

6.3 Mission Data Management

6.3.1 Description

This scenario illustrates the daily Mission Data Management activities, scheduling of L9 image data, providing command loads to the L9 spacecraft observatory, Mission Data downlinked, and transmission to DPAS for ingest, archival, image processing, and data distribution to the User Community.

6.3.2 Assumptions

- All systems are functioning nominally.

CHECK WITH LANDSAT 9 DATABASE AT:
https://<TBD>
TO VERIFY THAT THIS IS THE CORRECT VERSION PRIOR TO USE.
Use or disclosure of data contained on this page is subject to the restriction(s) on the title page of this document.

6.3.3 Walkthrough

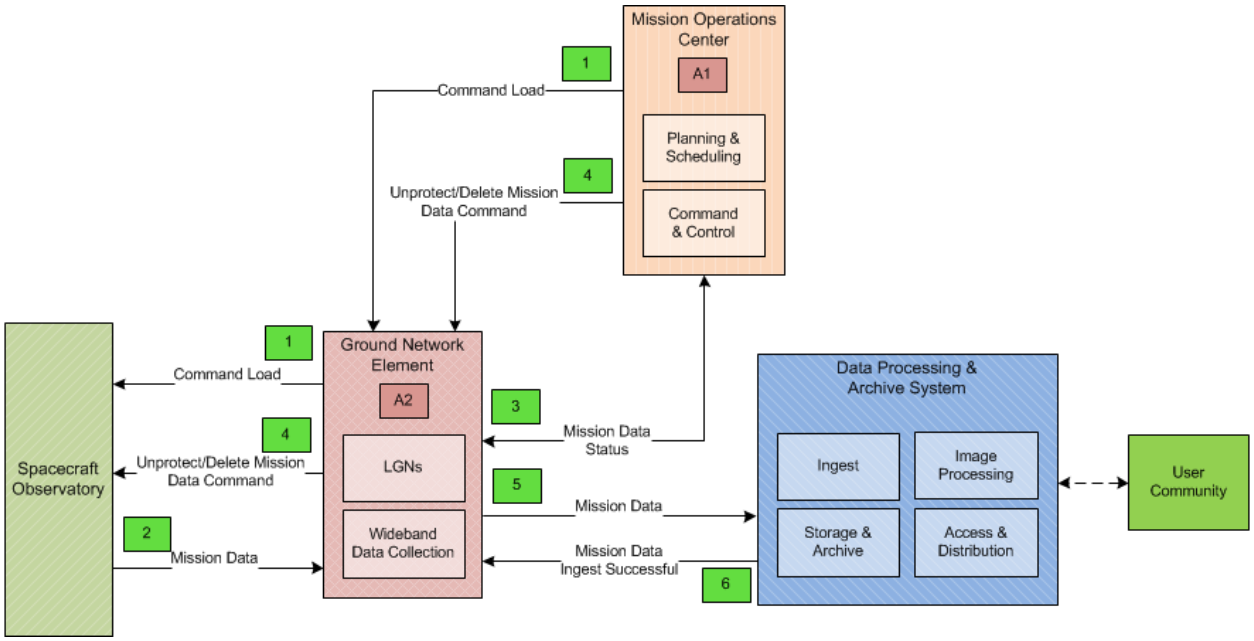

Figure 6-3 Mission Data Management

Table 6-1 Mission Data Management

Step	Description
A1	The MOC planning & scheduling function gathers all image collection requests based on input from the user community, allocates necessary resources, performs any needed activity de-confliction, and generates the observatory activity schedule, and verifies none of the activities violate Observatory or Ground System constraints.
1	The MOC command & control function prepares and transmits the stored command sequence for the activity schedule to the Observatory via the GNE LGN stations.
2	The Observatory begins execution of the stored command load performing the imaging and calibration activities as scheduled. The Observatory stores the data on board until the scheduled downlink opportunity where the mission data is then transmitted to the GNE LGN stations.
3	An LGN station receives the mission data from the Observatory. The LGN station generates a post-pass report containing acknowledgement messages to the MOC and also providing confirmation of the mission data files successfully received from the Observatory.
4	The MOC commands the Observatory to unprotect and/or delete the successfully-received mission data, thus maintaining space for future recording in Observatory mass storage.

CHECK WITH LANDSAT 9 DATABASE AT:
https://<TBD>
TO VERIFY THAT THIS IS THE CORRECT VERSION PRIOR TO USE.
Use or disclosure of data contained on this page is subject to the restriction(s) on the title page of this document.

Step	Description
5	The mission data is routed from the LGNs stations to the wideband data collection function for integration into complete intervals. Complete intervals are routed to the DPAS for data ingest, storage & archiving, image processing, and image data distribution to the User Community.
6	The DPAS data ingest function sends the GNE wideband data capture function notification of mission data being successfully ingested for processing.
A2	The GNE wideband data collection function archives the mission data to the permanent archive directory within the DPAS storage & archive function. GNE LGN stations can send the interval files within 90 days of collection to DPAS ingest function again upon request if required.

6.4 Mission Data Retransmission

6.4.1 Description

This scenario describes how retransmission of L9 data from the Observatory will occur.

6.4.2 Assumptions

- L9 imaging sensor data was collected by the observatory and downlinked to the LGN station. A portion of the data downlinked could not be confirmed as successfully received during the LGN contact. The portion that could not be confirmed remains on board the observatory in mass storage.

CHECK WITH LANDSAT 9 DATABASE AT:
https://<TBD>
TO VERIFY THAT THIS IS THE CORRECT VERSION PRIOR TO USE.
Use or disclosure of data contained on this page is subject to the restriction(s) on the title page of this document.

6.4.3 Walkthrough

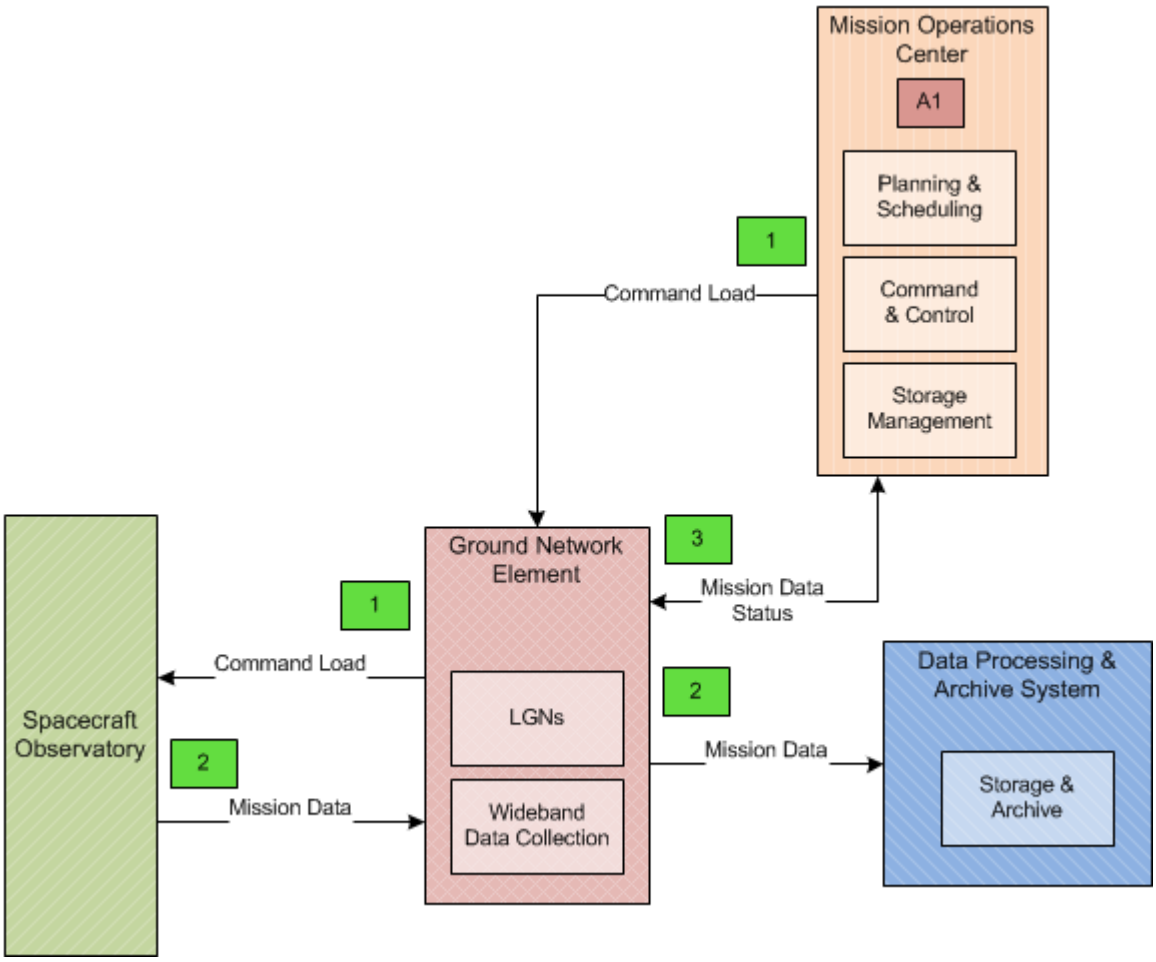

Figure 6-4 Mission Data Retransmission

CHECK WITH LANDSAT 9 DATABASE AT:
https://<TBD>
TO VERIFY THAT THIS IS THE CORRECT VERSION PRIOR TO USE.
Use or disclosure of data contained on this page is subject to the restriction(s) on the title page of this document.

Table 6-2 Mission Data Retransmission

Step	Description
A1	Based on observatory telemetry and LGN station post pass reports, the MOC identifies the data in observatory mass storage that must be re-downlinked. Mass storage utilization is also re-analyzed to account for the data still in mass storage and upcoming imaging sensor data collections. The MOC planning and scheduling function schedules the data for re-downlink in an upcoming pass.
1	During an LGN contact, the MOC Command and Control function transmits a command for a file re-downlink from the observatory.
2	The Observatory downlinks the mission data during the GNE LGNs contact. The GNE wideband data collection function delivers the mission data to the DPAS storage & archive.
3	The GNE provides mission data status to the MOC indicating the retransfer was successful. The data then can be deleted from the mass storage via the functionality of the storage management function.

6.5 IC Scheduling

6.5.1 Description

This scenario illustrates the primary interactions between L9 and the International Cooperators (ICs). This scenario begins with the IC request for special image collection and ends with the Data Validation & Exchange process.

There are two ways for an IC to request data. Nighttime and off-Nadir special request which requires the Data Acquisition Managers approval, and specific individual scenes outside the ICs station mask can be requested using the functionality provided by the DPAS Access and Distribution.

6.5.2 Assumptions

- All systems are functioning nominally.

CHECK WITH LANDSAT 9 DATABASE AT:
https://<TBD>
TO VERIFY THAT THIS IS THE CORRECT VERSION PRIOR TO USE.
Use or disclosure of data contained on this page is subject to the restriction(s) on the title page of this document.

6.5.3 Walkthrough

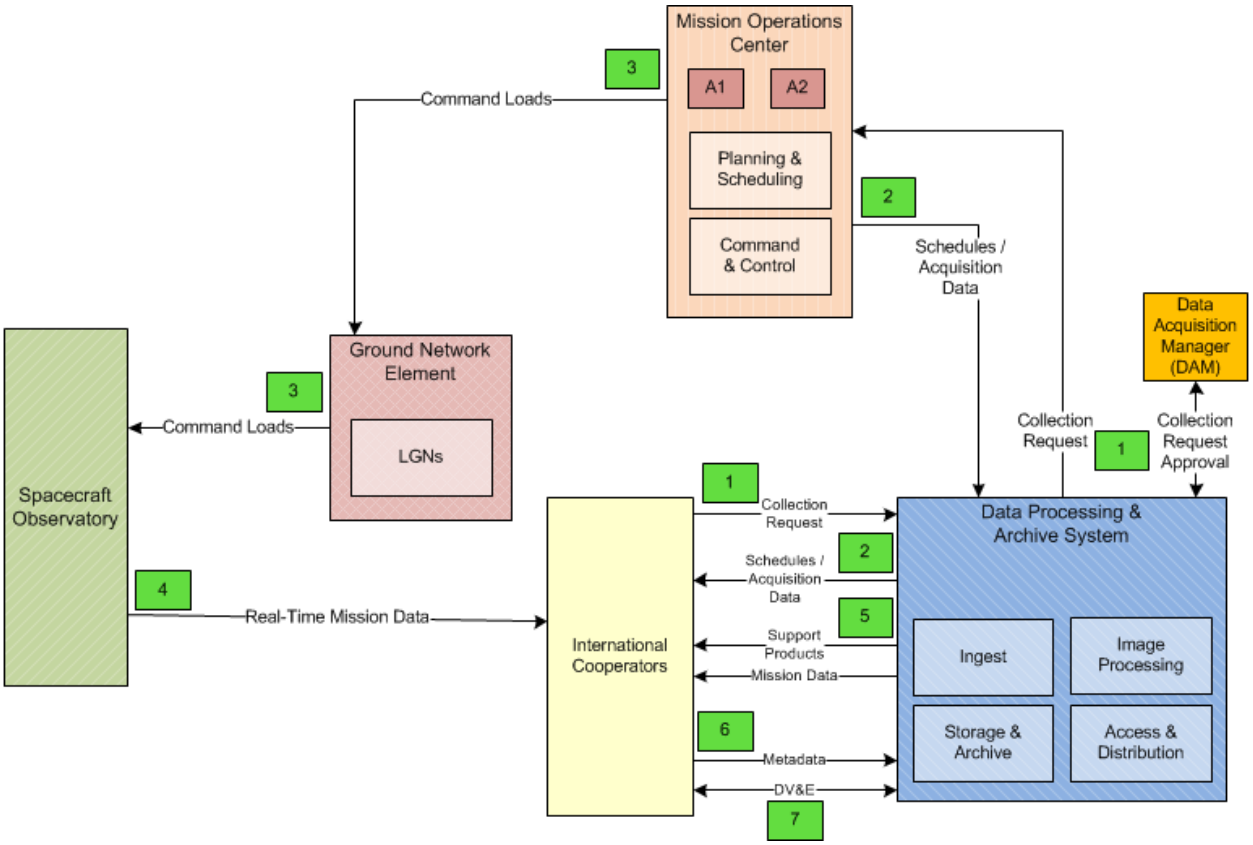

Figure 6-5 IC Scheduling

Table 6-3 IC Scheduling

Step	Description
A1	The MOC will determine all earth imaging activities that occur within all ICs acquisition circles, and schedules that data for real-time downlinks.
	Note: The ICs will notify the MOC of any station scheduled downtimes, and or any ground station malfunctions.
1	ICs generate and submit image collection requests that is not in the daily activity or collection schedule, and/or requests special collection request i.e., nighttime collects, Off-Nadir collects The ICs interface with the DPAS access & distribution function to submit individual scene requests. As part of the collection activity, all ICs special requests are evaluated for acceptance or rejection by the Data Acquisition Manager. For the most part, IC stations are satisfied by the baseline mission acquisitions and don't submit many special requests.

CHECK WITH LANDSAT 9 DATABASE AT:
https://<TBD>
TO VERIFY THAT THIS IS THE CORRECT VERSION PRIOR TO USE.
Use or disclosure of data contained on this page is subject to the restriction(s) on the title page of this document.

Step	Description
A2	The ICs collection activity request is combined with other observatory activities being managed by the MOC planning and scheduling functions, allocates necessary resources, performs any needed activity de-confliction, and generates the observatory activity schedule, and verifies none of the activities violate Observatory or Ground System constraints.
2	The MOC passes the confirmed contact schedule, scene transmit schedule, and acquisition data to the DPAS for distribution to the ICs.
3	The MOC's command & control function prepares and transmits the stored command sequence for the activity schedule to the Observatory via the ground network LGNs.
4	The Observatory begins execution of the stored command load performing the imaging and calibration activities as scheduled. The observatory downlinks real-time mission data and ancillary data being collected to all ICs during the duration of their respected contacts.
	Note: this data is also stored within the Observatory mass storage for downlink over an LGN on a later contact.
5	The ICs receive support products from the DPAS access & distribution function needed for image data processing. The ICs receive mission data when requested.
6	The ICs provide metadata for scenes captured and processed, along with post-pass reports to DPAS access & distribution function for long term archiving.
7	For new ICs, Data Validation and Exchange (DV&E) occurs by the ICs sending the DPAS access & distribution function five intervals for image processing. Once successfully processed within DPAS the ICs become certified. Once all ICs are certified, DV&E occurs once per year for each IC.

6.6 Maintain Orbit

6.6.1 Description

This scenario describes the processes related to station keeping for the L9 spacecraft. The scenario begins with measurements of the spacecraft position and ends with confirmation that maneuvers were completed successfully.

6.6.2 Assumptions

- All systems are functioning nominally.

CHECK WITH LANDSAT 9 DATABASE AT:
https://<TBD>
TO VERIFY THAT THIS IS THE CORRECT VERSION PRIOR TO USE.
Use or disclosure of data contained on this page is subject to the restriction(s) on the title page of this document.

6.6.3 Walkthrough

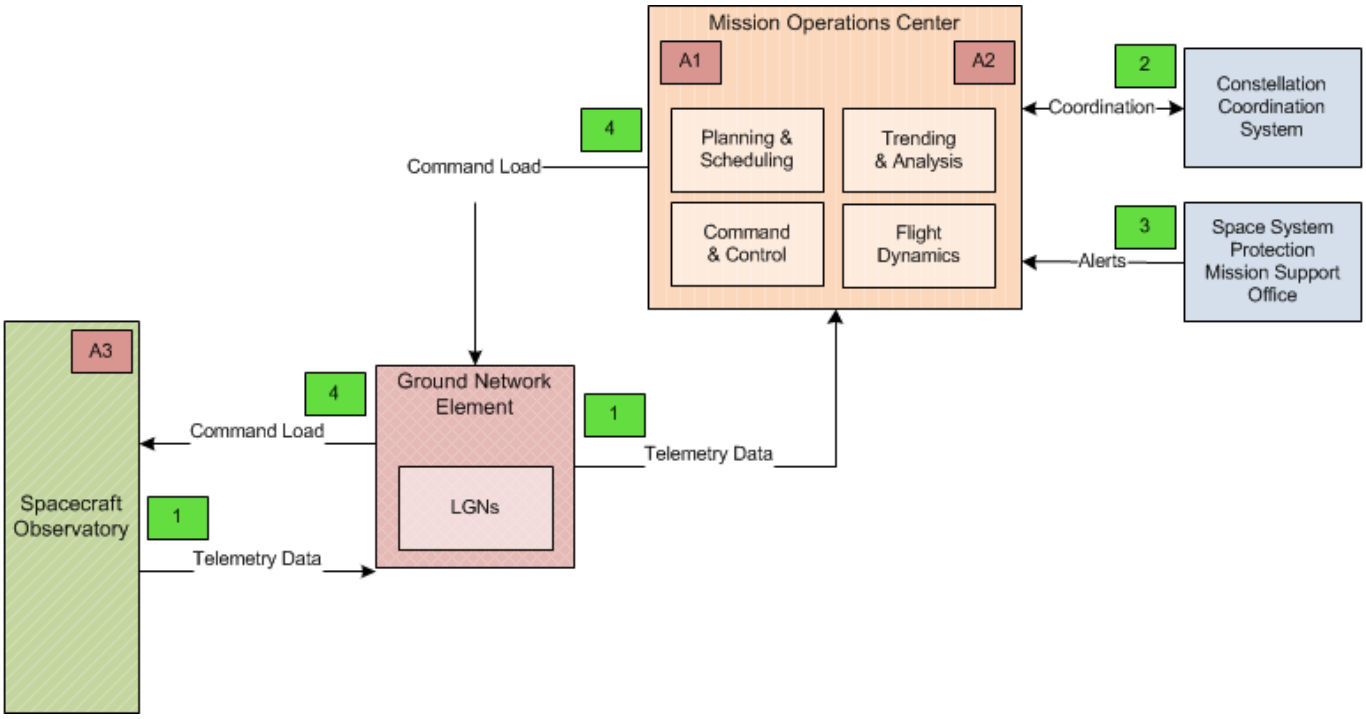

Figure 6-6 Maintain Orbit

Table 6-4 Maintain Orbit

Step	Description
	This scenario begins with measurements relevant to the determination of the spacecraft precision ephemeris. These measurements occur asynchronously and are represented as parallel flows for the purpose of this scenario.
1	The observatory performs measurements relevant to orbit determination. These measurements are included as part of the standard telemetry streams during contacts with GNE LGNs. The LGNs forward the telemetry data to the MOC command & control function.
A1	The MOC command & control function passes all the telemetry data to the trending and analysis function for archival after the GNE LGN station contact is completed. These data include the observatory measurements.
2	The MOC coordinates with other MOCs operating satellites flying in the same orbital plane as Landsat 9 (the "morning constellation). This coordination is to ensure adequate operational safety in the group of satellites flying in the same orbital plane as L9.

CHECK WITH LANDSAT 9 DATABASE AT:
https://<TBD>
TO VERIFY THAT THIS IS THE CORRECT VERSION PRIOR TO USE.
Use or disclosure of data contained on this page is subject to the restriction(s) on the title page of this document.

Step	Description
3	The Space System Protection-Mission Support Office (SSP-MSO) sends orbital debris monitoring alerts to the Flight Dynamics function. These messages consist of ellipsoid volume data representing buffer regions between L9 and other orbiting debris that could collide with L9. Two volumes are used - the "monitor volume" (larger) and the "tasking alert volume" (smaller). Predicted monitor volume violations are reported in routine messages from SSP-MSO. Violation of the tasking alert volume initiates additional tracking of the offending objects by SSP-MSO to refine the orbit for more accurate conjunction assessment, which is forwarded to the MOC operators.
A2	MOC operators evaluates telemetry and makes a determination as to whether a maneuver is required to maintain orbit and mission safety. Additional operations management approval for certain types of maneuvers may be required. The MOC operator uses the flight dynamics function to derive the details of the orbital maneuver(s) required. Predicted ephemeris corresponding to planned maneuvers are also sent to SSP-MSO for predicted conjunction assessment(s). The potential for conjunctions are assessed prior to final maneuver planning and selection. A maneuver request is sent to the MOC planning and scheduling function which allocates resources for executing the maneuver. This includes scheduling the GNE LGN station contact for the commanding, and potentially identifying a period of time during which no mission data collections will be performed, for input to the scheduling process. The maneuver is then incorporated into the observatory activity schedule.
	Note that the planning of maneuvers is done well in advance of the maneuver. Steps A2 is expected to occur after a significant amount of coordination on the part of MOC staff. Step A2 may be completed days or even weeks in advance of the actual maneuver.
4	The MOC command and control function transmits the command load to implement the observatory activity schedule, including the maneuver. At the time of the contact, the Command & Control function establishes contact with the observatory through the GNE LGNs. This communication is accomplished in real time. The command load is sent to the observatory through the GNE LGNs.
A3	The observatory executes the commanded maneuver sequence. Depending on the operations approach for Landsat 9, which is TBD, observatory capabilities to "enable/disable" the maneuver may optionally be employed if the time between maneuver and command load uplink is large.
	Note that this is an iterative process. Following the maneuver, measurements are taken to ensure that the observatory is in the intended orbit. Therefore the system proceeds to step 1 of this scenario, and repeats.

CHECK WITH LANDSAT 9 DATABASE AT:
https://<TBD>
TO VERIFY THAT THIS IS THE CORRECT VERSION PRIOR TO USE.
Use or disclosure of data contained on this page is subject to the restriction(s) on the title page of this document.

6.7 Flight Software Upload

6.7.1 Description

This scenario illustrates the routine update of L9 flight software. The scenario begins with the generation of new flight software and ends with verification that the in-flight software was successfully updated.

6.7.2 Assumptions

- All systems are functioning nominally.
- There is some reason to perform a flight software update, and the nature of the update required is well characterized and tested.
- The Flight Software Vendor has already used an applicable Software Development and Verification Facility with sufficient fidelity to verify the software update, prior to delivery to the MOC.

6.7.3 Walkthrough

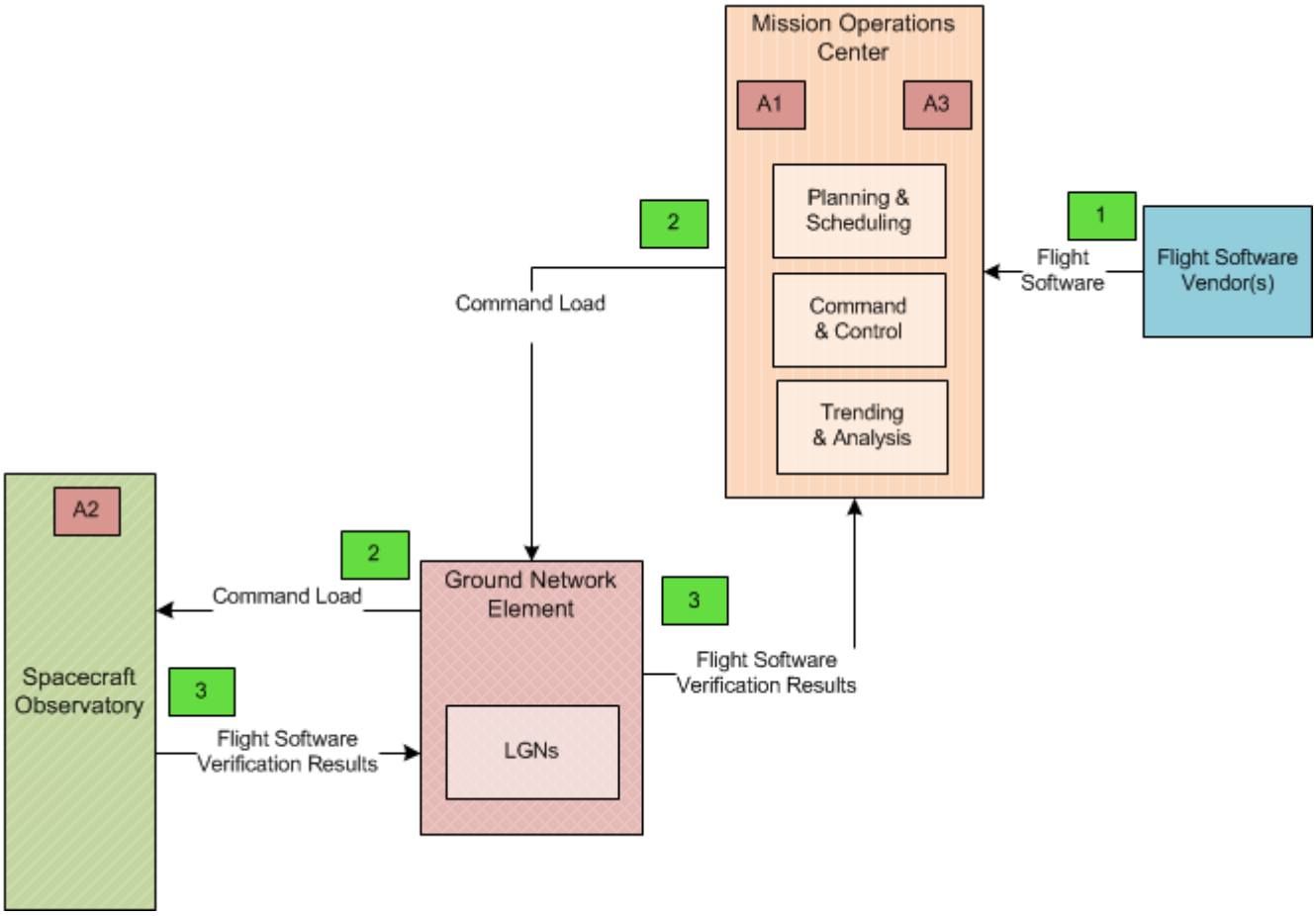

Figure 6-7 Flight Software Upload

CHECK WITH LANDSAT 9 DATABASE AT:
https://<TBD>
TO VERIFY THAT THIS IS THE CORRECT VERSION PRIOR TO USE.
Use or disclosure of data contained on this page is subject to the restriction(s) on the title page of this document.

Table 6-5 Flight Software Upload

Step	Description
1	A new flight software update is provided by the instrument or spacecraft flight software developer/maintainer. This is the actual flight software code, which will be installed in the observatory. The update is sent to the MOC command and control function.
A1	The MOC command & control function tests the flight software update command sequence using the observatory simulator. The MOC generates a command sequence, to apply the flight software update to the observatory. A flight software update request is planned and scheduled into the observatory activity schedule.
2	The MOC command and control function transmits the command load to install the flight software update. At the time of the contact the command load is sent to the observatory via the GNE LGNs.
	Note that it may require multiple contacts with a ground station to uplink an entire flight software update. During flight software cutover on board the spacecraft, mission data downlinks to LGNs could possibly be suspended temporarily.
A2	The observatory receives, verifies, and executes the command load. The command load would typically include instructions to verify the application of the flight software update, such as checksums, reporting the operating version number. The observatory executes these verification commands.
3	The verification command results are sent back to the MOC via the GNE LGN station in real time.
A3	The MOC evaluates the verification data to confirm that the command load and flight software execution were successful. The command load is sent to the MOC trending and analysis function for archival. The trending and analysis function archives the command load and updated flight software.

6.8 Communication with the Space Network (SN)

6.8.1 Description

This scenario describes the interactions between L9 and the SN. This scenario begins with the scheduling of the SN resources and ends with the receipt of S-band telemetry stream. This scenario does not cover whatever observatory operations may be performed through SN – as almost any operation could be performed.

6.8.2 Assumptions

- All systems are functioning nominally. This does not preclude the use of SN, and often SN may be employed in situations where systems are not functioning normally. This assumption really means that this scenario does not describe a blind acquisition process or extensive anomaly investigation scenario.

CHECK WITH LANDSAT 9 DATABASE AT:
https://<TBD>
TO VERIFY THAT THIS IS THE CORRECT VERSION PRIOR TO USE.
Use or disclosure of data contained on this page is subject to the restriction(s) on the title page of this document.

6.8.3 Walkthrough

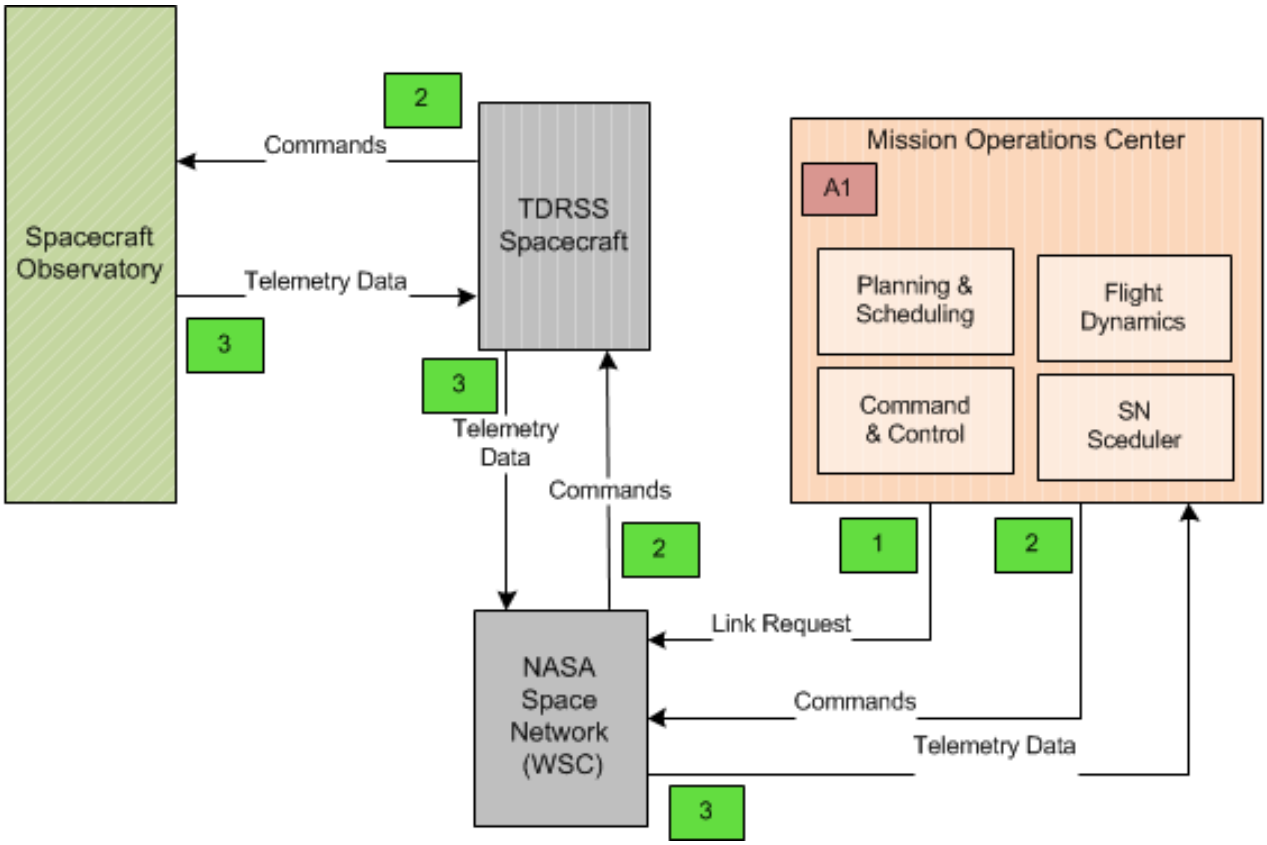

Figure 6-8 Communication with the SN

Table 6-6 Communication with the SN

Step	Description
A1	The MOC Flight Dynamics and Planning and Scheduling functions define/plan the desired SN contact times. An FOT operator uses this information to schedule SN resources. The SN scheduler tool in the MOC is used by an FOT operator to schedule SN resources through the SN White Sands Complex (WSC). This process may start 21 days in advance and is iterated with updated flight dynamics information as the planned SN contact draws nearer. The SN contact activity is incorporated into the observatory activity schedule within the MOC Planning and Scheduling function. The activity schedule is forwarded to the Command and Control function. Prior to the scheduled contact time, the Command and Control function generates a link service request and forwards this to the WSC.
1	Prior to the scheduled contact time, the MOC Command and Control function generates a link service request and forwards this to the WSC.

CHECK WITH LANDSAT 9 DATABASE AT:
https://<TBD>
TO VERIFY THAT THIS IS THE CORRECT VERSION PRIOR TO USE.
Use or disclosure of data contained on this page is subject to the restriction(s) on the title page of this document.

Step	Description
2	The MOC Command and Control function generates a command sequence using the observatory activity schedule, and forwards this to the WSC. The WSC ground station transmits the S-band communications stream to an SN satellite (TDRSS). The SN satellite contacts the L9 observatory and relays to it the S-band communication antennae on the L9 observatory.
3	The observatory generates telemetry data and transmits an S-band communications stream to the SN satellite. The SN satellite relays the S-band communications stream to the SN WSC ground station. The WSC ground station forwards the received S-band telemetry data to the MOC Command and Control function.

6.9 Monitor Health & Safety

6.9.1 Description

This scenario describes the operations performed for both short term and long term monitoring of the spacecraft health and safety. The scenario begins with the collection of related data on the spacecraft and ends with monitoring / analysis by the FOT operators.

6.9.2 Assumptions

- All systems are functioning nominally.

6.9.3 Walkthrough

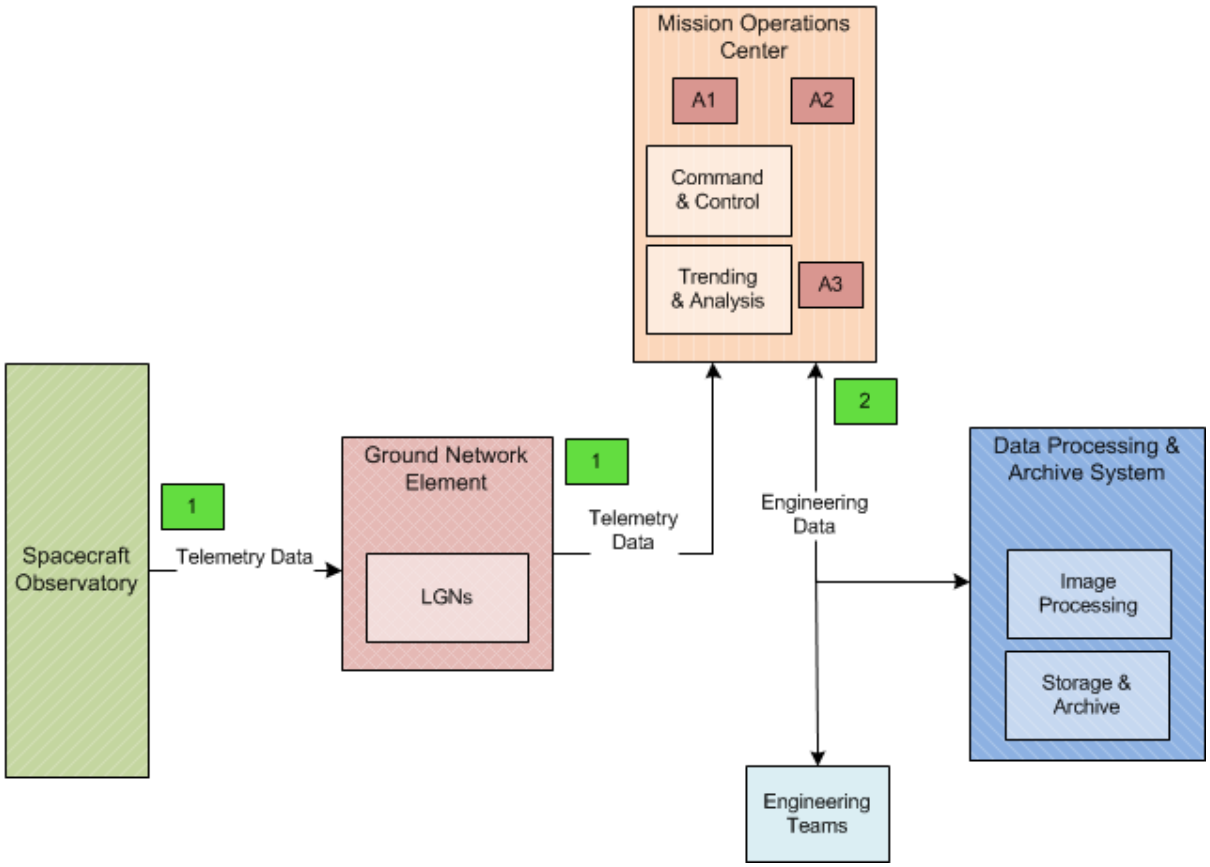

CHECK WITH LANDSAT 9 DATABASE AT:
https://<TBD>
TO VERIFY THAT THIS IS THE CORRECT VERSION PRIOR TO USE.
Use or disclosure of data contained on this page is subject to the restriction(s) on the title page of this document.

Figure 6-9 Monitor Health & Safety

Table 6-7 Monitor Health & Safety

Step	Description
1	The observatory collects telemetry points regarding health & status information of subsystems. These data are stored onboard and later downlinked to the LGN station. The real-time telemetry is also downlinked to the LGN station. The LGN station routes this data in real time to the MOC.
A1	The MOC Command & Control function automatically monitors all key telemetry points for pre-established limit values. Any out-of-limits value is automatically detected and a notification is sent or displayed to the FOT. All real-time telemetry received in the MOC is combined with the received stored state of health telemetry and archived. The MOC Trending and Analysis functions store all telemetry data collected since launch within the MOC for real to near real-time access by authorized users. The MOC Command and Control system is capable of replaying real-time telemetry recorded during a pass for additional analysis if needed.
2	The MOC Trending and Analysis function makes copies of telemetry data available to the Cal/Val, Spacecraft Vendor, and Instrument(s) Vendor engineering teams to perform detailed analyses of engineering telemetry data to diagnose subsystem faults and to detect trends of any degraded performances onboard the observatory.
	Note: A2 represents the long-term monitoring capability.
A2	A FOT operator initiates an analysis session via the MOC Trending and Analysis function. The Trending and Analysis capability is available to approved sources outside of the MOC. The operator can select single or multiple telemetry points for evaluation. The MOC Trending and Analysis function retrieves all relevant data from the telemetry archive. Processing is performed as required, specified by the operator conducting the analysis. The Trending and Analysis function retrieves all relevant data from the telemetry archive. Processing is performed as required, specified by the operator conducting the analysis.
A3	Selected Cal/Val Team members interface to the Trending and Analysis system to access observatory state of health data relevant for the long term calibration and performance monitoring of the imaging sensor and any calibration components/devices. They also utilize the mission data to evaluate anomalies and state of health of spacecraft and instrument data.

6.10 Safehold/Autonomous Failsafe Occurrence and Recovery Mission

6.10.1 Description

This scenario illustrates the non-nominal activity associated with an anomaly identified onboard the observatory and the fail-safe process the observatory will complete without ground interaction. The scenario begins with a fault condition and ends with notification of the MOC that the observatory is in safe-hold mode.

CHECK WITH LANDSAT 9 DATABASE AT:
https://<TBD>
TO VERIFY THAT THIS IS THE CORRECT VERSION PRIOR TO USE.
Use or disclosure of data contained on this page is subject to the restriction(s) on the title page of this document.

6.10.2 Assumptions

- The MOC and GNE are functioning nominally.
- The observatory flight software has been developed such that continuous health and status data is recorded, analyzed and logged on board, allowing for detection of fault situations.
- A fault situation (not intermittent) occurs on board the observatory, which triggers a safehold mode.
- The observatory successfully enters safehold mode and cannot change modes without ground commanding.
- The observatory stored command table which controls S-band contacts is not disabled.

6.10.3 Walkthrough

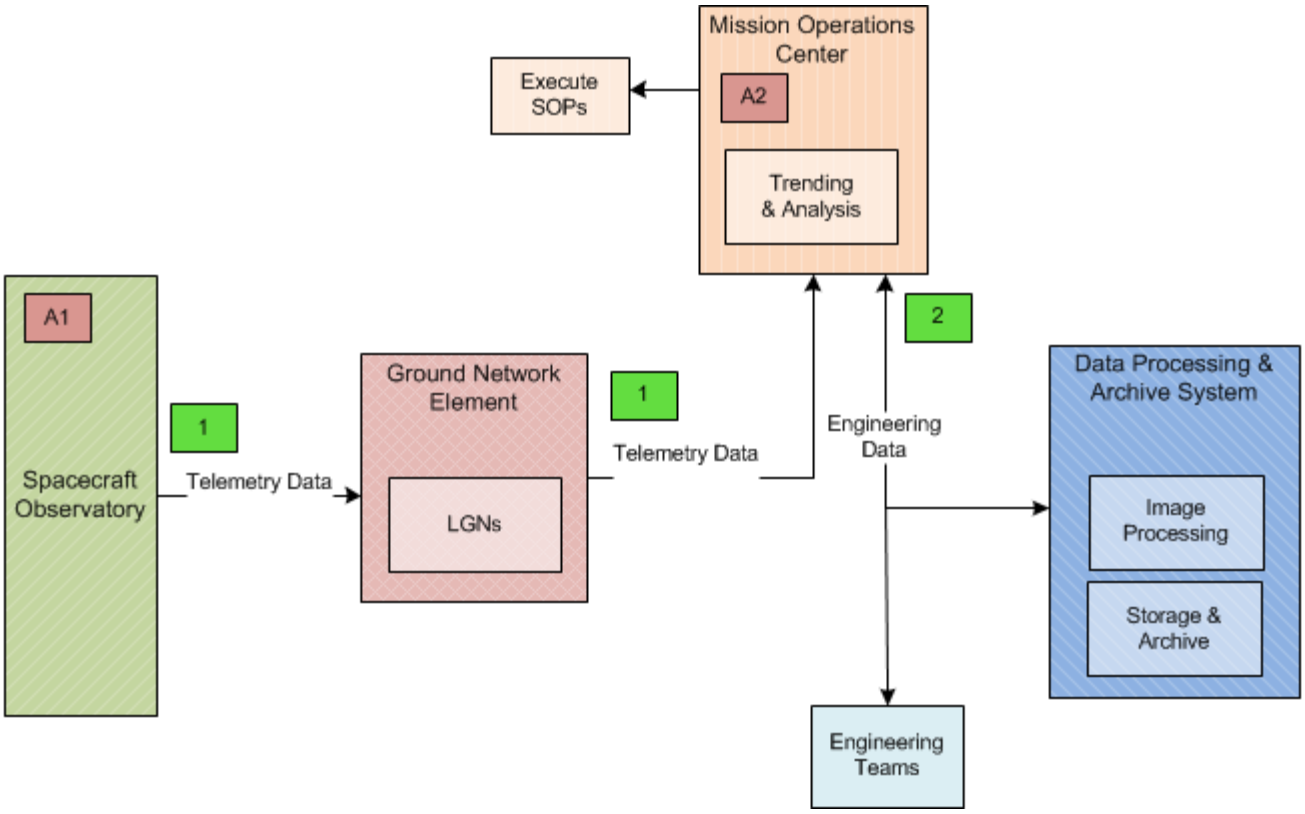

Figure 6-10 Safehold/Autonomous Failsafe Occurrence and Recovery Mission

Table 6-8 Safehold/Autonomous Failsafe Occurrence and Recovery Mission

Step	Description
A1	A fault condition occurs on board the observatory. The observatory detects the condition during routine internal health and status monitoring. The observatory verifies the condition and continues data logging. The observatory initiates the safe-hold protocol by shutting down all non-essential hardware and processes (but continuing to log data) and continues until successfully completed. After completion of safe hold, data logging continues.

CHECK WITH LANDSAT 9 DATABASE AT:
https://<TBD>
TO VERIFY THAT THIS IS THE CORRECT VERSION PRIOR TO USE.
Use or disclosure of data contained on this page is subject to the restriction(s) on the title page of this document.

Step	Description
1	The observatory downlinks S-band data to GNE LGN stations at the next opportunity, then routes the data to appropriate MOC teams for analysis and archiving.
A2	The MOC immediately initiates standard operations procedures and contingency operations procedures if needed upon detection of the safe-hold condition by the observatory.
2	The MOC trending and analysis function makes copies of telemetry data available to the Cal/Val, Spacecraft Vendor, and Instrument(s) Vendor engineering teams to perform detailed analyses of engineering telemetry data to diagnose subsystem faults and to detect trends of any degraded performances onboard the observatory.

6.11 User Query Order and Product Distribution

6.11.1 Description

This scenario illustrates the routine user query, order and product distribution of a particular L9 scene(s). The scenario begins with a user initiating a search for data and concludes with delivery of data products to the user.

6.11.2 Assumptions

- All systems are functioning nominally.
- The user is requesting a product from archived data.

6.11.3 Walkthrough

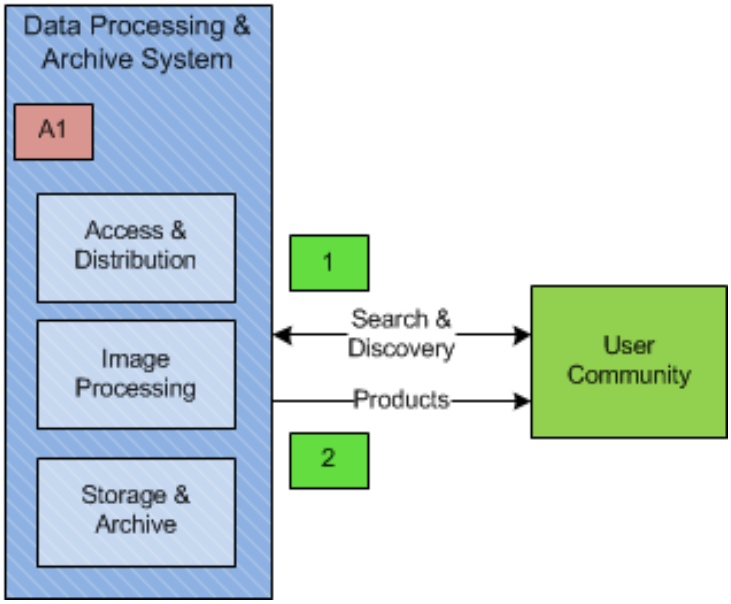

Figure 6-11 User Query Order and Product Distribution

Table 6-9 User Query Order and Product Distribution

CHECK WITH LANDSAT 9 DATABASE AT:
https://<TBD>
TO VERIFY THAT THIS IS THE CORRECT VERSION PRIOR TO USE.
Use or disclosure of data contained on this page is subject to the restriction(s) on the title page of this document.

Step	Description
1	A User initiates a search for products and information via DPAS access & distribution function mechanisms. The User may search, and view browse data and metadata about resulting scenes. The User ultimately chooses scenes for ordering. The access & distribution function obtains additional information from the User if required (through the same interface) and builds the order(s) required to fulfill the request.
A1	The DPAS access & distribution function generates the requests necessary to satisfy the order and passes them to the storage and archive function. The Storage and Archive function makes the products available to the Access & Distribution function.
2	The DPAS access & distribution function provides the products back to the User electronically.

6.12 Scene Request & Delivery

6.12.1 Description

This scenario describes the operations performed when special imaging requests as described in 3.2.2.2 are received. This scenario begins with the initiation of a special imaging request by a User and ends with delivery of data products.

6.12.2 Assumptions

- All systems are functioning nominally.
- The special imaging request is approved by the Data Acquisition Manager as falling within the policy guidelines for such requests.
- The User already has an account on the DPAS Access & Distribution system, and this account has been pre-cleared to submit special data collection requests. These users are usually an IC station user, or a CVT member.

CHECK WITH LANDSAT 9 DATABASE AT:
https://<TBD>
TO VERIFY THAT THIS IS THE CORRECT VERSION PRIOR TO USE.
Use or disclosure of data contained on this page is subject to the restriction(s) on the title page of this document.

6.12.3 Walkthrough

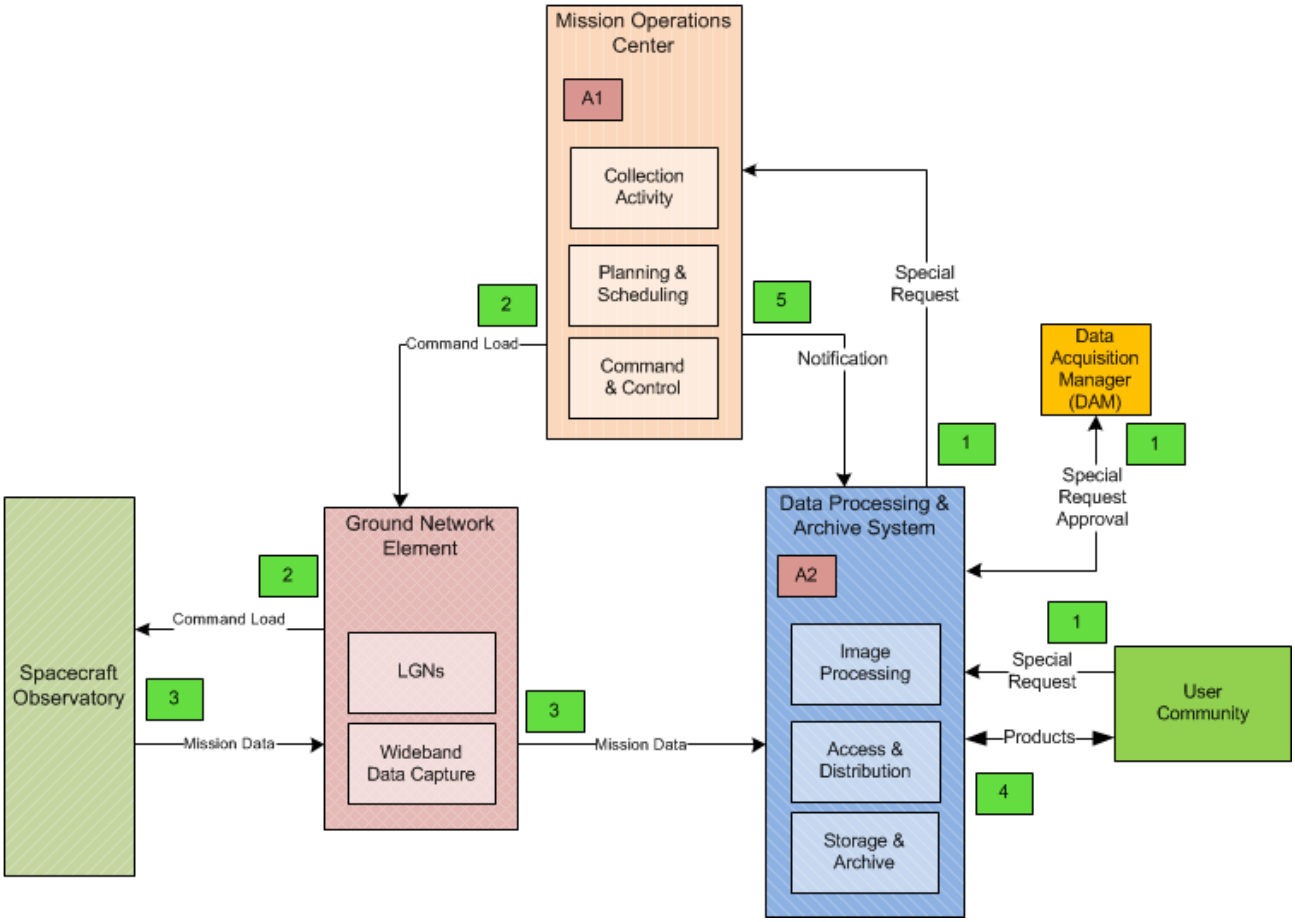

Figure 6-12 Scene Request & Delivery

Table 6-10 Scene Request & Delivery

Step	Description
1	A User submits a special imaging request to the MOC via the DPAS access & distribution function. The requested is routed to the Data Acquisition Manager (DAM) who has authority to adjust collection request, user priority ranges, and approves or disapproves any image data collection request. The DAM identifies the request as a special request and coordinated with DPAS the special image scene handling if required.
	Note: The user may also contact a Customer Service agent on the telephone, who in turn enters the request into the DPAS Access & Distribution function on their behalf. There is an account-level control over who may submit special imaging requests. Internal DPAS functionality will generate the requested products upon arrival.

CHECK WITH LANDSAT 9 DATABASE AT:
https://<TBD>
TO VERIFY THAT THIS IS THE CORRECT VERSION PRIOR TO USE.
Use or disclosure of data contained on this page is subject to the restriction(s) on the title page of this document.

Step	Description
A1	Once approved by the DAM, the MOC collection activity function develops a collection activity request, which incorporates the special request, along with other regularly scheduled collections, adjusted to accommodate the special imaging request if necessary. This request is sent to the MOC planning & scheduling function, then develops or revises the observatory activity schedule. The MOC provides the to-be-executed observatory schedule information to the GNE LGNs, and the DPAS. The observatory activity schedule and resources are passed to the command & control function. The MOC planning & scheduling function also schedules a LGN contact as soon as possible following the observatory collection of the special image data. The commands to downlink the special data may be uplinked in the same contact or a subsequent contact.
2	The MOC command & control function translates the activity schedule into a command load. At the scheduled time, the LGN establishes contact with the observatory, in real time the command load is sent.
3	The observatory collects the image data, and at the next scheduled LGN contact downlinks the data. The imaging scenes are sent to the DPAS storage and archive function from the GNE LGNs.
A2	The DPAS storage and archive function makes the data available to the image processing function upon receipt. The image processing function generates the requested data products and makes them available to the storage and archive function for temporary storage.
4	The DPAS access & distribution functions collection request interface sends a notification to the user that the data was either scheduled and/or downlinked. Once the data is in the searchable inventory the user can download the data.
	This alternate thread illustrates a status capability
5	The MOC collection activity function notifies the DPAS access & distribution function of the particular collections identified to satisfy this request. The MOC planning & scheduling function updates this information if there are any changes.
	Note: At any time the User may query the DPAS Access & Distribution Function to inquire about the status of the special collection request.

6.13 Backup Flight Operations

L9 will have a backup Mission Operations Center (bMOC) capability. The Mission Operations Manager can transfer operations to the bMOC which will perform observatory health and safety, receive and process real-time telemetry, and provide the capabilities to command the Observatory, and perform science data planning & scheduling functions to continue nominal operations if the primary MOC is unavailable. The switchover may be initiated from the bMOC, in the event the primary location is unexpectedly non-operational. The FOT will conduct routine periodic proficiency testing from the bMOC to ensure that bMOC capabilities are ready at any time needed. Table 6-11 describes the high level steps to transition operations from Primary MOC to the bMOC.

CHECK WITH LANDSAT 9 DATABASE AT:
https://<TBD>
TO VERIFY THAT THIS IS THE CORRECT VERSION PRIOR TO USE.
Use or disclosure of data contained on this page is subject to the restriction(s) on the title page of this document.

Table 6-11 Backup Flight Operations

Step	Description
	Note: The MOC continuously / routinely syncs information with the bMOC to ensure all information needed to perform nominal operations is located at the bMOC.
1	Upon detection of a failure in the Primary MOC that prevents nominal operations from being conducted for an extended period of time, the MOM provides direction to begin performing operations from the bMOC.
2	The bMOC systems are brought on-line and configured to support nominal operations within 72 hours (TBR).
	Note: Critical Observatory health and safety functionality (TT&C) is brought online first, then ancillary systems to follow.
3	The bMOC performs nominal operations of the Observatory for up to 30 days (TBR)
4	The bMOC syncs all information gathered during backup operations to the Primary MOC once it is back online.
5	The MOM declares the return of nominal operations to the Primary MOC.
6	Operations resume at the Primary MOC, and the bMOC returns to its nominal configuration.

CHECK WITH LANDSAT 9 DATABASE AT:
https://<TBD>
TO VERIFY THAT THIS IS THE CORRECT VERSION PRIOR TO USE.
Use or disclosure of data contained on this page is subject to the restriction(s) on the title page of this document.

Appendix A Potential List of International Cooperator Ground Stations

Station	Location	Latitude (deg)	Longitude (deg)
ABG	Awutu Bawjiase, Ghana	5.5694 N	0.1797 E
ABN	Abuja, Nigeria	9.0667 N	7.4833 E
ASK	Astana, Kazakhstan	51.0224 N	71.467 E
ASN	Alice Springs, Australia	23.7589 S	133.8822 E
AWE	Aswan, Egypt	23.9707 N	32.8487 E
BJC	Miyun, China (aka Beijing)	40.4506 N	116.8572 E
BKT	Bangkok, Thailand	13.73 N	100.79 E
BOC	Bogotá, Colombia	4.5389 N	74.0156 W
COA	Cordoba, Argentina	31.5242 S	64.4636 W
CHM	Chetumal, Mexico	18.5447 N	88.2636 W
CPE	Cotopaxi, Ecuador	0.62 S	78.58 W
CUB	Cuiaba, Brazil	15.5528 S	56.0733 W
DJK	Daejeon, Korea	37.4593 N	127.0687 E
DKI	Parepare, Indonesia	3.9781 S	119.6497 E
DVU	Dunaivtsi, Ukraine	48.8504 N	26.7192 E
DWA	Darwin, Australia	12.359 S	130.982 E
GLC	Gilmore Creek, Alaska, USA	64.9764 N	147.521 E
GNC	Gatineau, Canada	45.5811 N	75.8061 W
HAJ	Hatoyama, Japan	36.0036 N	139.3481 E
HIJ	Hiroshima, Japan	34.3644 N	132.3786 E
HLV	Hoa Lac, Vietnam	20.9891 N	105.5211 E
HOA	Hobart, Australia	42.9256 S	147.4206 E
IKR	Irkutsk, Russia	52.2833 N	104.3 E
ISP	Islamabad, Pakistan	33.52 N	73.18 E
IVC	Inuvik, Canada	68.3617 N	133.731 W
JSA	Hartebeesthoek, South Africa (aka Johannesburg)	25.89 S	27.7 E
KHC	KaShi, China	39.5051 N	75.9287 E
KIS	Kiruna, Sweden	67.8767 N	21.0622 E
KLM	Kuala Lumpur, Malaysia	3.46 N	102.34 E
KUJ	Kumomoto, Japan	32.8356 N	130.8694 E
LBG	Libreville, Gabon	0.3 N	9.2514 E
LUZ	Lusaka, Zambia	15.4094 S	28.3024 E
MCM	Mexico City, Mexico	19.0193 N	99.1983 W
MGR	Magadan, Russia	59.5567 N	150.8283 E
MLK	Malindi, Kenya	2.9956 S	40.1945 E
MOR	Moscow, Russia	55.65 N	37.4667 E
MPF	Montpelier, France	43.6108 N	3.8767 E
MPS	Maspalomas, Spain	27.76 N	15.63 W
MTI	Matera, Italy	40.65 N	16.7 E

CHECK WITH LANDSAT 9 DATABASE AT:
https://<TBD>
TO VERIFY THAT THIS IS THE CORRECT VERSION PRIOR TO USE.
Use or disclosure of data contained on this page is subject to the restriction(s) on the title page of this document.

NSG	Neustrelitz, Germany	53.3297 N	13.0725 E
NWN	Noordwijk, Netherlands	52.24 N	4.45 E
PAC	Prince Albert, Canada	53.2125 N	105.934 W
PUC	Punto Arenas, Chile	53.1569 S	70.9147 W
RPI	Rumpin, Indonesia	6.3711 S	106.6311 E
RSA	Riyadh, Saudi Arabia	24.72 N	46.63 E
SGI	Shadnagar, India	17.03 N	78.19 E
SGS	Svalbard, Norway	78.2306 N	15.3894 E
SNC	SanYa, China	18.2533 N	109.5036 E
SRT	Si Racha, Thailand	13.1014 N	100.9282 E
TFT	Taipei, Taiwan	25.093 N	121.39 E

CHECK WITH LANDSAT 9 DATABASE AT:
https://<TBD>
TO VERIFY THAT THIS IS THE CORRECT VERSION PRIOR TO USE.
Use or disclosure of data contained on this page is subject to the restriction(s) on the title page of this document.

Appendix B Abbreviations and Acronyms

ACS	Attitude Control System
bMOC	backup Mission Operations Center
CA	Conjunction Assessment
CCB	Configuration Control Board
CCS	Constellation Coordination System
CCSDS	Consultative Committee for Space Data Systems
CFDP	CCSDS File Delivery Protocol
CM	Configuration Management
CMO	CM Office
COMSEC	Communications Security
CPF	Calibration Parameter File
CTP	Command and Telemetry Processor
CVT	Calibration / Validation Team
DAM	Data Acquisition Manager
DEM	Digital Elevation Model
DOI	Department of Interior
DPAS	Data Processing and Archive System
EDU	Engineering Development Unit
EMC	Electromagnetic Compatibility
EMI	Electromagnetic Interference
EO-1	Earth Observing 1
EROS	Earth Resources Observation and Science
ESMO	Earth Science Mission Operations
FDF	Flight Dynamics Facility
FOT	Flight Operations Team
FRR	Flight Readiness Review
GCP	Ground Control Point
GFE	Government Furnished Equipment
GLC	Gilmore Creek Station
GNE	Ground Network Element
GPS	Global Positioning System
GRT	Ground Readiness Test
GS	Ground System
GSE	Ground Support Equipment
GSFC	Goddard Space Flight Center
HGS	Hallway Ground Station
I&T	Integration and Test
IC	International Cooperator
IO Net	IP Operational Network
IST	Integrated System Test
JspOC	Joint Space Operations Center
KSC	Kennedy Space Center
L8	Landsat 8
L9	Landsat 9

CHECK WITH LANDSAT 9 DATABASE AT:
https://<TBD>
TO VERIFY THAT THIS IS THE CORRECT VERSION PRIOR TO USE.
Use or disclosure of data contained on this page is subject to the restriction(s) on the title page of this document.

LGN	Landsat Ground Network
LGS	Landsat Ground Station
LMCM	Launch Management Coordination Meeting
LRR	Launch Readiness Review
LST	Landsat Science Team
LTAP-9	L9 Long-Term Acquisition Plan
LV	Launch Vehicle
LV-GSE	Launch Vehicle Ground Support Equipment
MDR	Mission Dress Rehearsal
MMO	Mission Management Office
MOC	Mission Operations Center
MRT	Mission Readiness Test
NASA	National Aeronautics and Space Administration
NASCOM	NASA Communications
NCEP	National Center for Environment Predictions
NEN	NASA Near Earth Network
NISN	NASA Integrated Service Network
NOAA	National Oceanic and Atmospheric Administration
NSLRSDA	Land Remote Sensing Data Archive
OAR	On-orbit Acceptance Review
OLI-2	Operational Land Imager 2
PIA	Project Implementation Agreement
PLA	Payload Adapter
PPF	Payload Processing Facility
RF	Radio Frequency
SAPMSO	Space Asset Protection Mission Support Office
SC	Spacecraft
SCTR	Special Calibration Test Requirements
SDVF	Software Development and Validation Facility
SGS	Svalbard Satellite Station
SLI	Sustainable Land Imaging
SN	Space Network
SOS	Spacecraft / Observatory Simulator
SS-GSE	Space Segment Ground Support Equipment
SSP-MSO	Space System Protection Mission Support Office
SSR	Solid State Recorder
STV	Spacecraft Transportation Vehicle
TBD	To be determined
TBR	To be resolved
TDRSS	Tracking and Data Relay Satellite System
TIRS-2	Thermal Infra-Red Sensor 2
USAF	United States Air Force
USC	United States Code
USGS	U.S. Geological Survey
USNO	US Naval Observatory
USSTRATCOM	United States Strategic Command

CHECK WITH LANDSAT 9 DATABASE AT:
https://<TBD>
TO VERIFY THAT THIS IS THE CORRECT VERSION PRIOR TO USE.
Use or disclosure of data contained on this page is subject to the restriction(s) on the title page of this document.

UTC	Universal Time Code
UTC1	UTC Corrected
VAFB	Vandenberg Air Force Base
WAN	Wide Area Network
WR	Western Range
WRS-2	Worldwide Reference System-2
WSC	White Sands Complex

CHECK WITH LANDSAT 9 DATABASE AT:
https://<TBD>
TO VERIFY THAT THIS IS THE CORRECT VERSION PRIOR TO USE.
Use or disclosure of data contained on this page is subject to the restriction(s) on the title page of this document.